connect

צנרת ואביזרי נירוסטה

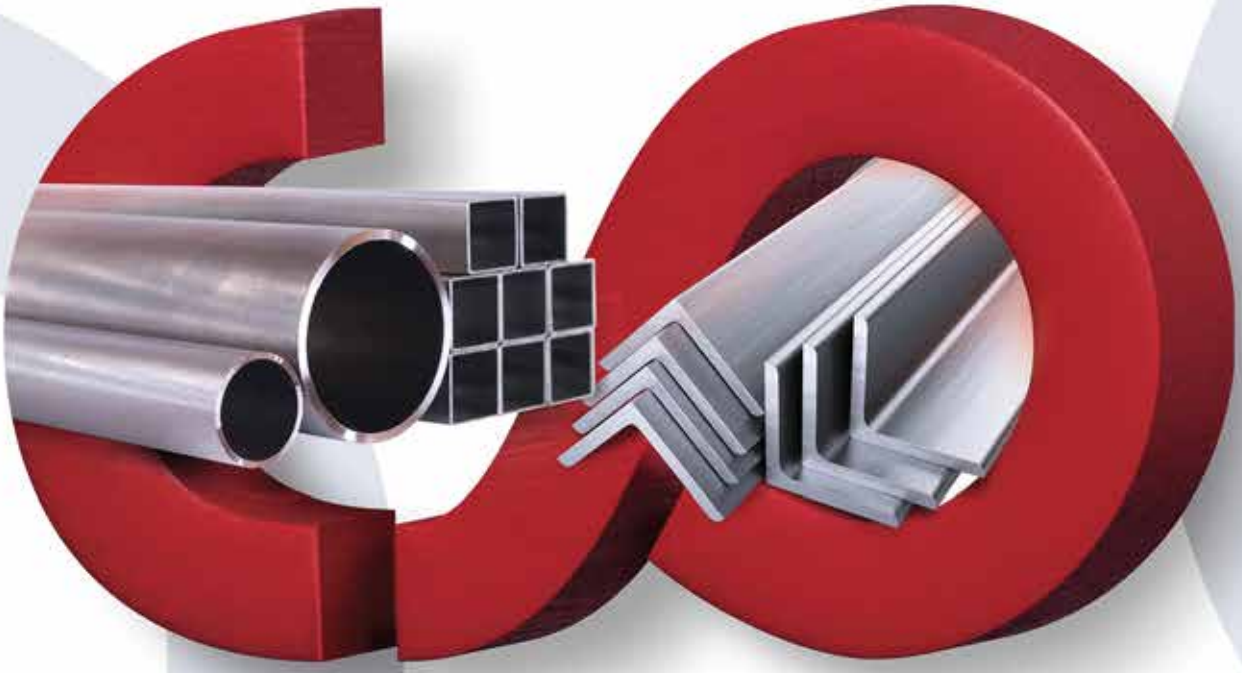

connect
צנרת ואביזרי נירוסטה

איכות ללא פשרות

יבוא והפצת מוצרים באיכות ללא פשרות.

חברת קונקט עוסקת במתן פתרונות מתקדמים ומקצועיים מנירוסטה לתעשייה.
אנו משווקים מגוון רחב של מוצרים, לרבות מוצרי צנרת ואביזרי נירוסטה, תוך הקפדה מרבית על איכות ועל סטנדרטים גבוהים ביותר.
חברת קונקט חרטה על דגלה מצוינות במתן שרות ואספקת ערך ללקוח.

מבין מוצרי הדגל של קונקט ניתן למצוא:

- צנרת נירוסטה בתקני: EN 10357; DIN 11850; ASTM A270 לתעשיית המזון והחלב.
- צנרת ואביזרים מנירוסטה סקדיול 10/40 לתעשייה.
- אביזרי צנרת וחיבורי צנרת מנירוסטה במגוון רחב של יישומים ותקנים.
- צנרת נירוסטה בתקן ASTM A312 לתעשייה הכימית והפטרוכימית.
- צנרת נירוסטה מלוטשת לקונסטרוקציות הנדסיות במבחר מידות.
- תעלות ופתחי ניקוז מנירוסטה לתעשיית המזון.
- ברזי נירוסטה לתהליכי יצור בתעשיית המזון.
- ציוד יעודי ומשאבות ליקבים.
- מוטות מלאים עגולים מנירוסטה.
- שטוחים וזויות מנירוסטה.

לחברה תו תקן ISO 9001:2015

היצרנים הטובים בעולם

חברת קונקט מייצגת בישראל את היצרנים המובילים בעולם

יצרנים מובילים ממדינות: גרמניה, איטליה, סין, תאילנד, טייוואן, תורכיה וישראל.
קשרי הרכש ארוכי הטווח של חברת קונקט מאפשרים לה לייעל ולהוזיל משמעותית את עלויות הפרוייקטים בכל סדר גודל.

פתרונות חכמים ושירות מקצועי

מתן פתרונות חכמים

בקונקט צוות מקצועי בעל ידע וניסיון רב בתחום יבוא צנרת נירוסטה ואביזרי צנרת.
הצוות מיומן בהתאמת פתרונות יעודיים לצרכי הלקוח: אנשי המקצוע ערוכים להעניק פתרונות חכמים, יעילים וישימים המותאמים בדיוק לצרכי הלקוח (Custom Made).

קשרי לקוחות

אנו בחברת קונקט מאמינים בטיפוח קשרים ארוכי טווח עם הלקוחות שלנו.
אנו מקפידים להעניק לציבור לקוחותינו יחס מקצועי ואישי תוך הקשבה לצרכים המקצועיים הייחודיים לכל לקוח ובכל היקף.

שירותי ערך מוסף

לחברת קונקט יכולת מענה לצרכים משתנים ומגוונים של לקוחותיה. אנו מומחים בתכנון, יעוץ והתאמת פתרונות לפרויקטים בתחום הנירוסטה כגון מערכות ניקוז מתקדמות, יבוא פתחי אדם למיכלים, התאמת פרופילים ואביזרי חיבור ועוד. כל פרוייקט מתוכנן בקפידה ומלווה בכל השלבים עד לשביעות רצון מלאה של הלקוח.

תוכן עניינים

אביזרי מזון 6

ממטרות שטיפה כדוריות / נשמים נירוסטה / פלסטיק 39

מסנני קו 40

אביזרי צנרת הברגות BSP #150 46

אביזרי צנרת הברגות BSP #3000 56

מחברים מהירים קמלוק BSP 60

מחברי צנרת סקדיאל עם תפר ומחברי צנרת סקדיאל ללא תפר 62

ברזים כדוריים 68

מפעילים פניאומטיים 75

אוגנים 78

CARDINAL 82

KIESELMANN 84

צנרת מזון, פרופילים, צנרת דקורטיבית, סקדיאל עם תפר וסקדיאל ללא תפר 92

שטוחים, זוויות, מוטות מלאים מנירוסטה 96

שסתומים וברזים עבור מכליות 102

פתחי אדם 106

מערכות ניקוז מתקדמות 108

חוטי ריתוך 115

חומרי ניקוי לנירוסטה 116

משאבות סניטריות לנוזלים לתעשיית המזון 120

Range of Butterfly Valves ברז פרפר

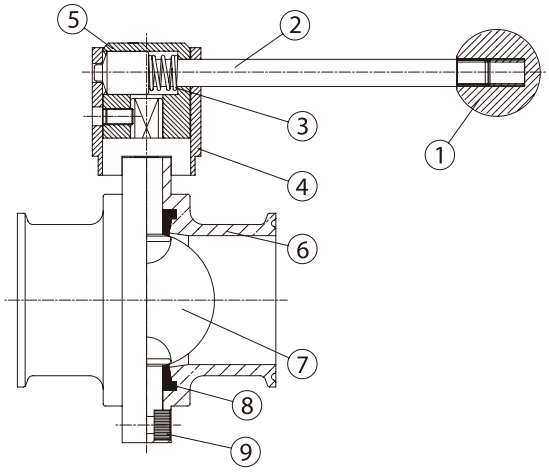

NO.	PARTS NAME
1	KNOB
2	STEEL-BAR
3	SPRING ST.ST
4	FIXED PIECE
5	HOLDER
6	BODY
7	DISC
8	EPDM RUBBER SEAT
9	SCREW BOLT

Torque for Full Open/Close

1.0"	< 9.8 N.m
1.5"	< 9.8 N.m
2.0"	13 N.m
2.5"	15 N.m
3.0"	20 N.m
4.0"	30 N.m
6.0"	70 N.m

*1kgf-m = 9.8 N.m = 86.8 lbf-in = 7.23 lbf-ft

GRIPPER HANDLE 12 POSITION-G12 (NYLON & STAINLESS)

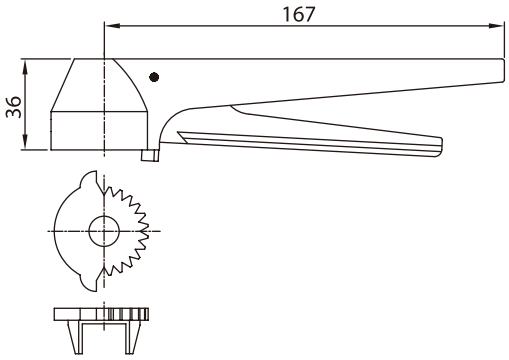

אטמים להחלפה לברז פרפר

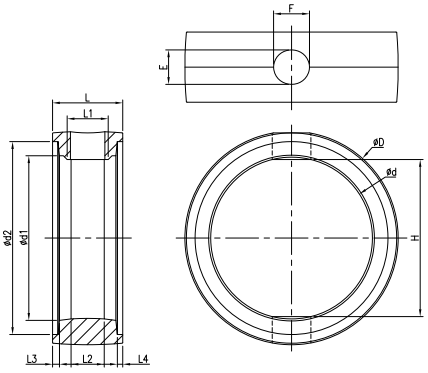

SIZE	d	d1	d2	D	L	L1	L2	L3	L4	H	E	F
1"	23	23.5	29.4	38.3	22.2	12.5	10	1.9	1.6	20.4	10.5	9.5
1-1/2"	36	36.4	44.2	50.7	21.2	12.5	10	2.4	2	34.3	10.5	9.5
2"	49	50	58.5	64.6	21.2	12.5	10	2	1.5	47.8	10.5	9.5
2-1/2"	60.5	61.5	69.1	78.5	27.6	16	13	2	1.5	59	12.5	11.5
3"	73	73.6	81	91.3	30.4	16	13	3	2.2	71.7	12.5	11.5
4"	100	101.6	112	121	33.2	16	13	3.4	2.8	99	12.5	11.5

unit:mm

* ניתן להזמין מידות שונות לפי דרישה

ברז פרפר קצוות ריתוך Butterfly Valve with Ferrule End

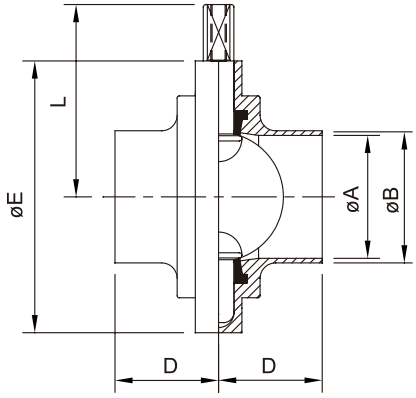

DIN WELD BUTTERFLY VALVE

SIZE	ØA	ØB	D	ØE	L
DN28	25	28	34	79	61
DN34	31	34	38	85	64.3
DN40	37	40	38	90	74.3
DN50	49	52	40	105	77.6
DN65	66	70	41	125	84.8
DN85	81	85	42	137	91.6
DN104	100	104	44	157	101.7

3A WELD BUTTERFLY VALVE

SIZE	ØA	ØB	SIZE	ØA	ØB	D	ØE	L
1/2"	9.4	12.7	—	—	—	34	79	61
3/4"	15.75	19.05	—	—	—	34	79	61
1.0"	22.1	25.4	DN25	22.5	25	34	79	61
1.5"	34.8	38.1	DN38	35.4	38	38	85	64.3
2.0"	47.5	50.8	DN51	48.0	51	40	105	74.3
2.5"	60.2	63.5	DN63	60.2	63.5	40	112	77.6
3.0"	72.2	76.2	DN76	72.1	76.1	41	125	84.8
4.0"	97.6	101.6	DN104	100	104	44	157	101.7
6.0"	146.8	152.4	—	—	—	70	216.5	138.9

ברז פרפר קצוות פרול Butterfly Valve with Weld End

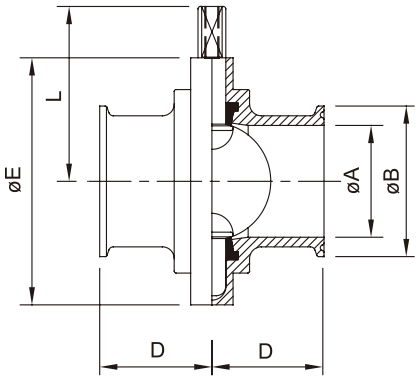

3A CLAMP BUTTERFLY VALVE

SIZE	ØA	ØB	D	ØE	L
1/2"	9.4	25.2	34	79	61
3/4"	15.75	25.2	34	79	61
1.0"	22.1	50.5	33	79	61
1.5"	34.8	50.5	33	85	64.3
2.0"	47.5	64.0	35	105	74.3
2.5"	60.2	77.5	35	112	77.6
3.0"	72.9	91.0	38	125	84.8
4.0"	97.4	119.0	38	157	101.7
6.0"	146.86	166.8	70	216.5	138.9

ברזי פרפר מפוקדים *

V. FARFALLA E. SM.
BUTTERFLY V. E. FR.
V. PAPILLON B. FR.
V. MARIPOSA E. SM.

K100 BV

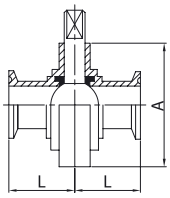

DN		A	L
1"	25	79,0	35,0
1 1/2"	38	85,0	36,0
2"	51	105,0	40,0
2 1/2"	63	112,0	40,0
3"	76	125,0	40,0
4"	101	157,0	45,0

C. PN. SE. VERTICALE
PN. ACT. SE. VERTICAL
VÉ. PN. SE. VERTICALE
CIL. NEUM. SE. VERTICAL

7C4 L

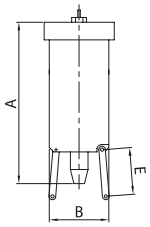

DN	A	B	E
25/52	211,0	76,0	64,0
63/101	211,0	76,0	58,0

* לא קיים במלאי ניתן להזמין לפי דרישה

שסתום אל-חוזר Non Return Valve (Check Valve)

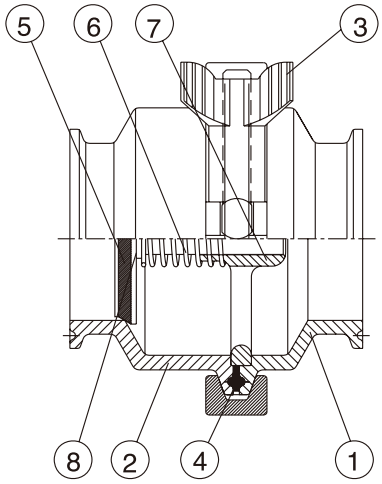

NO.	NAME
1	Short Body
2	Long Body
3	Clamp
4	13PG
5	Seal-Ring
6	ST.ST Spring
7	Flow Support Plate
8	Disc

Check Valve

Materials

Steel parts Stainless steel SS316(L)
Seal rings EPDM Rubber or Silicone/Viton (FKM)
Finish: OD≧ 0.8 , ID ≧ 0.8 or 0.4μm

Connections

The valve is available with welding ends for tubing according to 3A, SMS, DIN 11851

Technical data

Required different pressure for opening the valve fitted in a vertical pipe, as shown in fig. 3, the open pressure Max. product pressure: 1000kpa(10bar)

Material grades

Gasket-Body:EPDM/Silicone/Viton (FKM)/PTFE
Flow Area-EPDM/Silicone/Viton (FKM)

SPRING CHECK VALVE flow rate (fig 3)

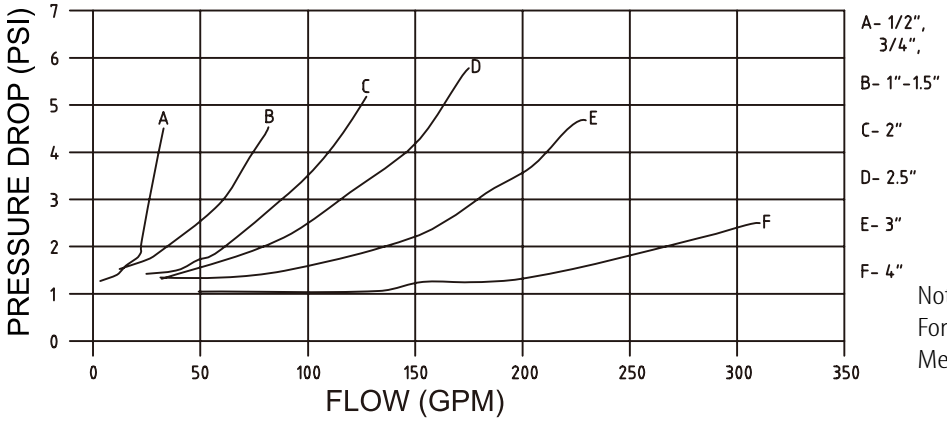

Note:
For the diagram the following applies:
Medium: : Water(20℃)

Oper pressure (PSI)

1/2"	3/4"	1"	1 1/2"	2"	2 1/2"	3"	4"
0.5	0.5	3.0	1.6	0.6	1.3	0.8	0.9

Open Pressure (fig. 1)

* ניתן להזמין אטמים NBR לפי דרישה

שסתום אל-חוזר עם אוגן באמצע וקצוות ריתוך Non-Return Valve

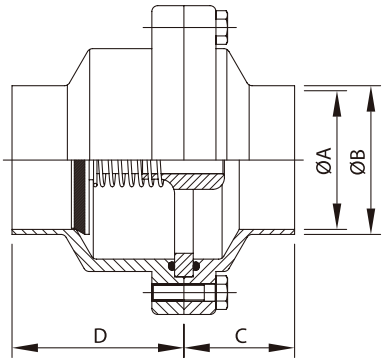

CHECK VALVE MIDDLE FLANGE TYPE/WELD END

3A	ØA	ØB	C	D
1/2"	9.4	12.7	23	34
3/4"	15.8	19.05	23	34
1"	22.1	25.4	34	48
1.5"	34.8	38.1	36	48
2"	47.5	50.8	36	48
2.5"	60.2	63.5	36	48
3"	72.9	76.2	36	48
4"	97.6	101.6	47	54

DIN	ØA	ØB	C	D
DN25	25	28	34	48
DN32	31	34	36	48
DN40	37	40	36	48
DN50	49	52	36	48
DN65	66	70	36	48
DN100	100	104	47	54

שסתום אל-חוזר עם קלמרה באמצע וקצוות לריתוך Non Return Valve

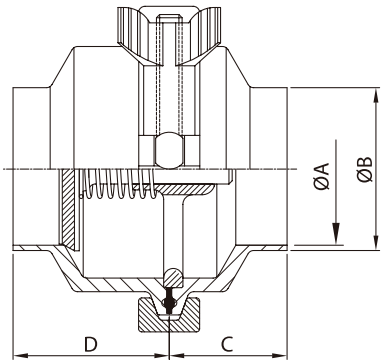

CHECK VALVE MIDDLE CLAMP TYPE/WELD END

SIZE	D		L	H	t
DN15	18	19	74	72	1.5
DN20	22	23	74	92	1.5
DN25	28	29	74	92	1.5
DN32	34	35	74	92	1.5
DN40	40	41	74	92	1.5
DN50	52	53	79	100	1.5
DN65	70	-	107	115	2
DN80	85	-	109	128	2
DN100	104	-	123	164	2

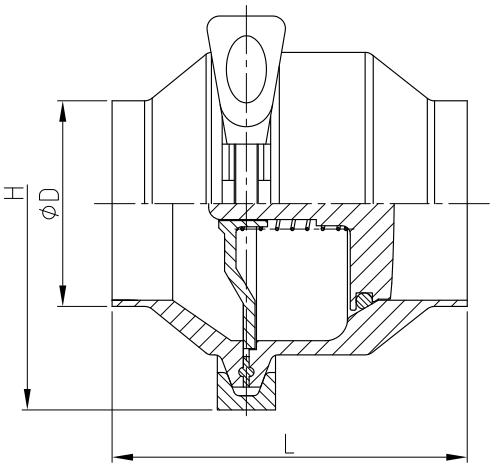

SIZE	D	L	H
1/2"	12.7	74	92
3/4"	19	74	92
1"	25.4	74	92
1-1/4"	**31.8**	**74**	**92**
1-1/2"	**38.1**	**74**	**92**
2"	**50.8**	**79**	**100**
2-1/2"	**63/5**	**99**	**115**
3"	**76/2**	**107**	**128**
3-1/2"	**89**	**109**	**128**
4"	**101/6**	**123**	**164**

מראה זרימה / חלון הסתכלות hygienic Sight Glass

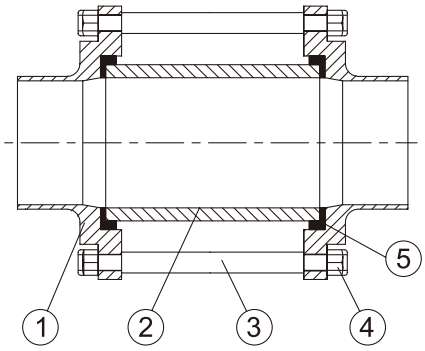

Hygienic Sight Glass:

Glass: Clean, High Press Pyrex Glass. Max Work 10 bar. Can be changeable.
Body: SUS304, 316L Precision Machined Body. With Width Connection End.3A, DIN, SMS, RJT, IDF Male/Male.Weld and Female End.
Screw Blot: Full Stainless Steel.
Seal: EPDM, Silicone and Viton.

NO.	NAME
1	Body
2	High Pressure Clean Glass
3	Screw Blot
4	Nylon Lock Nut
5	Seal

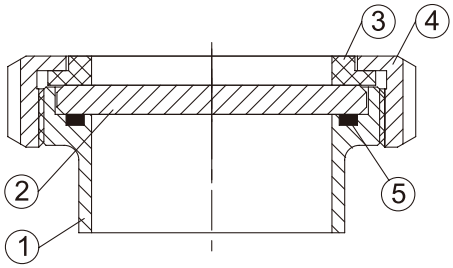

PYREX Glass data:

PYREX Borosilicate Glass Composition

Contect	SiO_2	Al_2O_3	Fe_2O_3	B_2O_3	Na_2O	K_2O
%	80.9	2.3	0.03	12.7	4.0	0.04

Physical Properties

Young's module	$6.4x10^5$ kg/cm^3
Poisson's ratio	0.20
Shear modules	$2.7x10^5$ kg/cm^2
Knoop Hardness (100g)	418KHN
Bending strength	$4\sim7x10^5$ kg/cm^2
Design stress (Safety factor)	67 kg/cm^2

NO.	NAME
1	Body
2	High Press Clean Glass
3	Teflon Gasket
4	NUT
5	Seal

With Weld End Only!

מראה זרימה עם קצוות לריתוך DIN/3A Sight Glass with Welded End 304L/316L

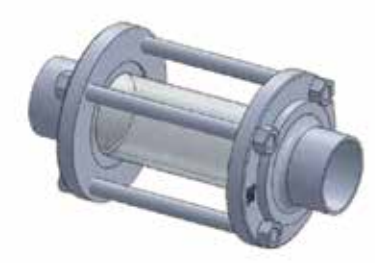

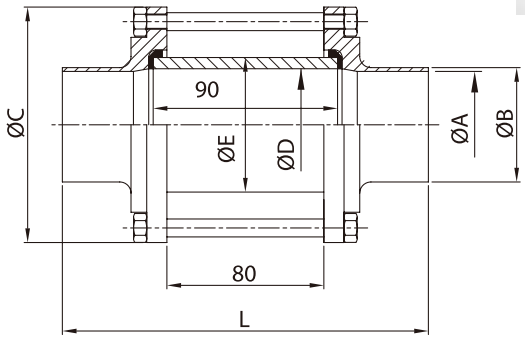

* ניתן לרכוש זכוכית למראה זרימה
* ניתן לרכוש אטמים טפלון למראה זמינה

Din Weld End Sight Glass

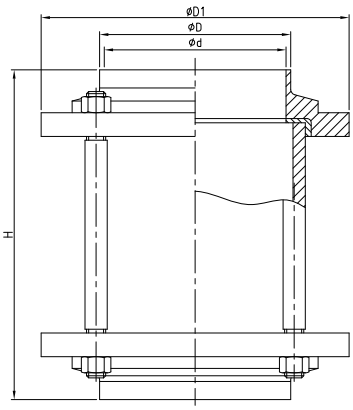

SIZE	d	D	D1	H
DN10	10	13	78	140
DN15	15	18	78	140
DN20	19	22	78	140
DN25	25	28	78	140
DN32	31	34	86	140
DN40	37	40	90	140
DN50	49	52	102	142
DN65	66	70	124	146
DN80	81	85	139	150
DN100	100	104	154	154
DN125	125	129	185	170
DN150	150	154	215	180

3A Weld End Sight Glass

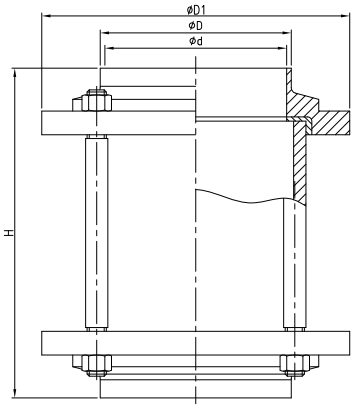

SIZE	d	D	D1	H
1/2"	9.4	12.7	78	140
3/4"	15.8	19.1	78	140
1"	22.4	25.4	78	140
1-1/4"	38.8	31.8	78	140
1-1/2"	35.1	38.1	86	140
2"	48.8	50.8	102	142
2-1/2"	59.5	63.5	115	146
3"	72.2	76.2	124	146
3-1/2"	85	89	139	150
4"	97.6	101.6	154	154
5"	127	133	185	170
6"	153	159	215	180

unit:mm

חלון הסתכלות Flat Sight Glass Welding Silicone Gasket. SS316L DIN

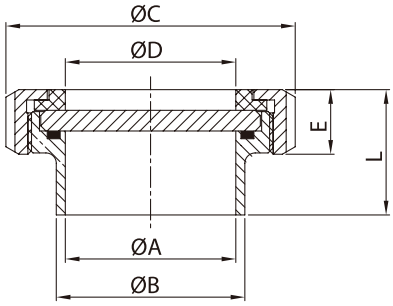

DIN WELD END SIGHT GLASS

	ØA	ØB	ØC	ØD	E	L
DN25	26	35	63	26	21	37
DN32	32	41	70	32	21	40
DN40	38	48	78	38	21	41
DN50	50	61	92	50	22	42.5
DN65	66	73	112	66	25	48.5
DN80	80	93	127	82	29	52.5
DN100	98	113	148	100	31	61.5

* ניתן להזמין זכוכית ואטמים להחלפה

ברז דגימה עם חיבור הברגה Sample Cock Valve

DN	A	B	C	gr.
3/8"	75	10	33	190
1/2"	85	14	35	300

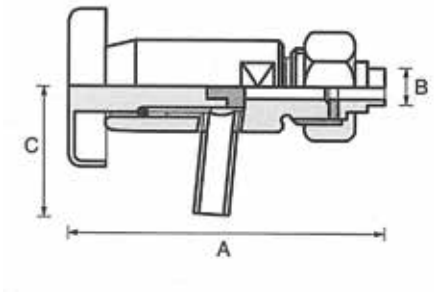

* ייצור של מגט לפי דרישה

100
PRODUCT-OUT
PRODUCT-IN

קלמרה לעומס כבד פין בודד פלב"מ A3 304
Heavy Duty Double Pin Clamp SS304 A3

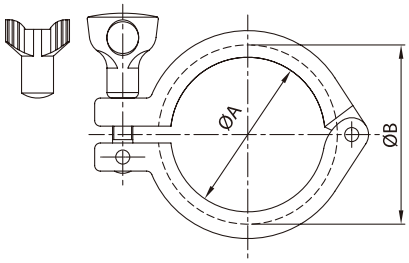

SIZE	ØA	ØB
1"~1.5"	44.4	53.6
3"	84	94
8"	205	220

קלמפ לעומס כבד פין כפול פלב"מ DIN 304

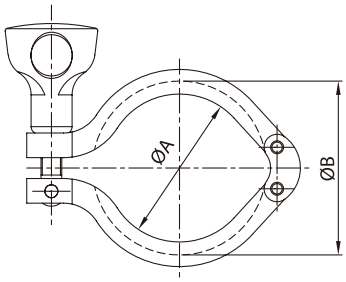

SIZE	ØA	ØB
1/2"~3/4"	20	28
1"~1.5"	43.6	53.6
2"	57	67
2.5"	70.6	80.6
3"	84	94
4"	112	122
6"	155	170
8"	205	220.8

קלמפ לעומס כבד פין כפול פלב"מ DIN 304 Heavy Duty Double Pin Clamp SS304

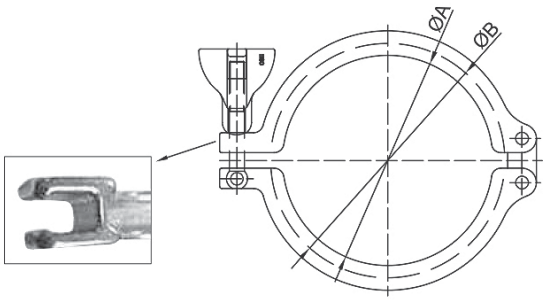

DN	ØA	ØB
DN10-DN20	27.2	37
DN25-DN40	44.5	54.5
DN50	57	68
DN65	84	95
DN80	99	110
DN100	112	123
DN115	123	134
DN125	144	159
DN150	172	187
DN200	222.5	237.5
DN250	257	272
DN300	308	323

פרול לריתוך Short/Long Welding Ferrule A3/Din

פרול 3A

1/2"~3/4"

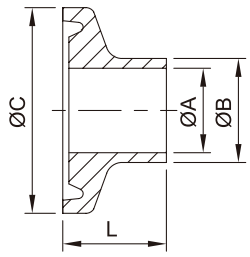

1.0"~12"

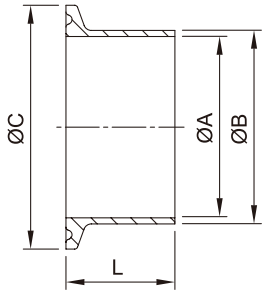

3A Welding Ferrule

SIZE	ØA	ØB	ØC	קצר L	ארוך L	ארוך L
1/4"	3.9	6.35	25	12.7	21.5	28.6
1/2"	9.4	12.7	25	12.7	21.5	28.6
3/4"	15.75	19.05	25	12.7	21.5	28.6
1"	22.1	25.4	50.5	12.7	21.5	28.6
1.25"	28.45	31.75	50.5	12.7	21.5	28.6
1.5"	34.8	38.1	50.5	12.7	21.5	28.6
2.0"	47.5	50.8	64	12.7	21.5	28.6
2.5"	60.2	63.5	77.5	12.7	21.5	28.6
3.0"	72.9	76.2	91	12.7	21.5	28.6
4.0"	97.4	101.6	119	15.8	21.5	28.6
6.0"	146.86	152.5	166.87	—	21.5	28.6 or 38.1
8.0"	197.66	203.3	217.67	—	21.5	28.6 or 38.1
10"	247.2	254	268.47	—	21.5	28.6 or 38.1
12"	298	304.8	319.27	—	21.5	28.6 or 38.1

פרול DIN

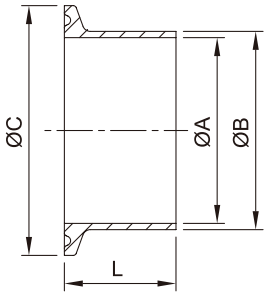

DIN Ferrule

SIZE	DA ØA	DA ØB	DB ØA	DB ØB	ØC	L
DN6	6	8	—	—	34	12.7
DN8	8	10	—	—	34	12.7
DN10	10	13	9	12	34	18
DN15	16	19	15	18	34	18
DN20	20	23	19	22	34	18
DN25	26	29	25	28	50.5	21.5
DN32	32	35	31	34	50.5	21.5
DN40	38	41	37	40	50.5	21.5
DN50	50	53	49	52	64	21.5
DN65	66	70	66	70	91	28
DN80	81	85	81	85	106	28
DN100	100	104	100	104	119	28
DN125	125	129	125	129	155	28
DN150	150	154	150	154	183	28
DN200	200	204	200	204	233.5	28

פרול חיבור BSP 316 L

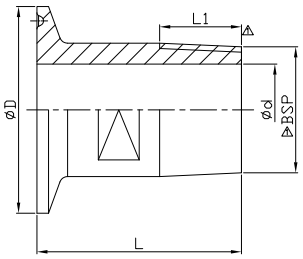

Size	d	D	L	L1	BSP
1/2"X1/2"	9.5	25	45	14	20.9
3/4"X3/4"	15.8	25	45	14	26.3
1"x1"	22.2	50.5	50	11	33.7
1.5"x1.5"	34.9	50.5	50	11	47.7
2"X2"	47.6	64	55	11	59.5

פרול לערגול 304/316 304/316 3A 3AExpending Ferrule

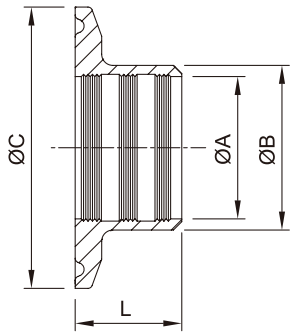

3A Roll-on Ferrule L304/L316

SIZE	ØA	ØB	ØC	L
1.0"	25.5	29.5	50.5	19.1
1.25"	31.9	36.3	50.5	21.5
1.5"	38.2	42.6	50.5	28.6
2.0"	50.9	55.7	64	33.3
2.5"	63.6	68.8	77.5	34.9
3.0"	76.3	81.9	91	36.5
4.0"	101.7	108.1	119	38.1

1.25”~4.0”

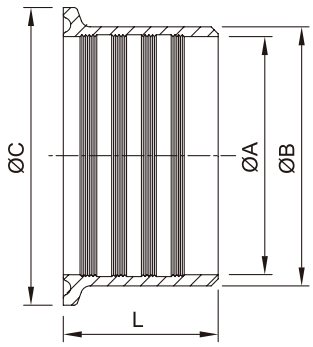

אטם טבעת לפרול A3
Gasket Ring for Ferrul A3

1"-12"

1/2"-3/4"

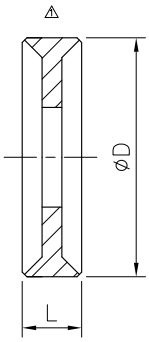

1/2"~3/4"

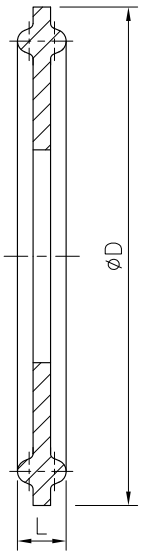

1"~12"

PLAIN TYPE

SIZE	D	L
1/2"	20.3	5
3/4"	20.3	5
1"	50.5	5
1-1/2"	50.5	5
2"	64	5.5
2-1/5"	77.5	5.5
3"	91	5.5
3-1/2"	106	5.5
4"	119	5.5
4-1/2"	130	5.5
5"	145	5.5
6"	167	5.5
8"	217.4	5.5
10"	268	5.5
12"	319	5.5

אטם טבעת לפרול DIN
Gasket Ring for Ferrul DIN

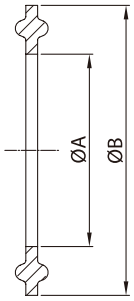

(PTFE)
ISO TYPE

SIZE	ØA	ØB
DN8	11.1	33.2
DN12	14.8	33.2
DN15	18.9	33.2
DN20	24.5	49.7
DN25	31.3	49.7
DN32	40	49.7
DN40	45.9	63.2
DN50	57.1	76.7
DN65	72.9	90.2
DN80	85.7	105.2
DN100	109.9	129.2
DN125	134.5	154.2
DN150	163.1	182.2
DN200	211.9	232.7

(EPDM)
DIN TYPE

SIZE	ØA	ØB
DN10	9.8	33.2
DN15	15.8	33.2
DN20	19.8	33.2
DN28	25.8	49.7
DN34	31.8	49.7
DN40	37.8	49.7
DN52	49.8	63.2
DN70	66.8	90.2
DN85	81.8	105.2
DN101.6	98.4	118.2
DN104	100.8	118.2
DN125	125.8	154.2
DN150	150.8	182.2
DN200	200.8	232.7

אטם טבעת לפרול 3A עם שפה
Gasket Ring for Ferrul with Brim A3 (EPDM' SILICONE)

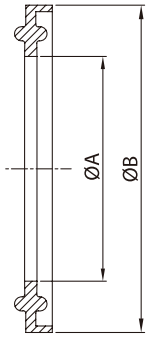

SIZE	ØA	ØB
1.0"	22.8	52.7
1.5"	35.8	52.7
2.0"	48.8	66.2
2.5"	60.5	79.7
3.0"	73.1	93.2
4.0"	97.8	121.2
6.0"	148	169.1
10"	249	270.7
12"	300	321.5

פקק סגר לפרול 3A Blank Cap for Ferrule 304 L / 316 L

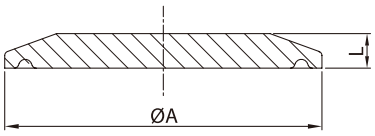

3A	1/2"-3/4"				1"	1.5"		2"	2.5"	3"		4"			6"		8"		10"	12"
DIN	—	DN10	DN15	DN20	DN25	DN32	DN40	DN50		DN65	DN80	DN100		DN125		DN150		DN200	—	—
ISO	—	DN8	DN12	DN15	DN20	DN25	DN32	DN40	DN50	DN65	DN80		DN100	DN125		DN150		DN200	—	—
ψA	25	34	34	34	50.5	50.5	50.5	64	77.5	91	106	119	130	155	166.8	183	217.7	233.5	268.5	319.3
L	6	6.3	6.3	6.3	6.3	6.3	6.3	6.3	6.3	6.3	6.3	7.9	7.9	7.9	11.1	11.1	11.1	11.1	11.1	11.1

מחבר פרול לצינור גמיש פלב"מ 316 L
3A Hose Adapter Ferrule End 316 L

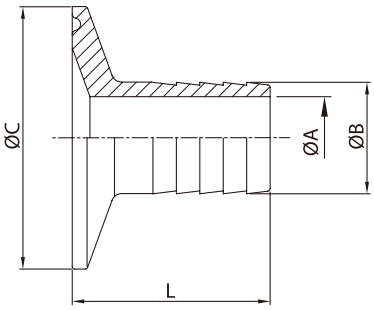

HOSE ADAPTER

SIZE	ØA	ØB	ØC	L	L1
1/2"*1/2"	9.5	13.7	25.2	38	25.3
3/4"*3/4"	15.8	21.4	25.2	38	25.3
1"*1/2"	9.5	13.7	50.5	38	25.3
1"*3/4"	15.8	21.4	50.5	38	25.3
1"*1"	20.6	25.4	50.5	43	30.3
1.5"*1/2"	9.5	13.7	50.5	38	25.3
1.5"*3/4"	15.8	21.4	50.5	38	25.3
1.5"*1.0"	20.6	25.4	50.5	43	25.3
1.5"*1.5"	33.2	38.1	50.5	43	30.3
2"*1.5"	33.2	38.1	64	43	30.3
2"*2"	46	50.8	64	58.7	46
2.5"*2.5"	58.7	63.5	77.5	59.5	46.8
3"*3"	72	76.2	91	78.6	65.9
4"*4"	97.6	101.6	119	85.5	72.8

חלקי רקורד DIN 304/316
DIN Unions

אום עגול לרקורד פלב"מ 4/6 חריצים 304
Round Nut for DIN Union SS304 4/6 Slots

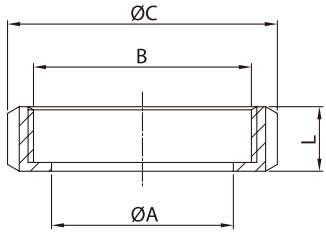

SIZE	ØA	B	ØC	D	L	SLOTS
10	19	RD 28*1/8	38	15	18	4
15	25	RD 34*1/8	44	15	18	4
20	31	RD 44*1/6	54	17	20	4
25	36	RD 52*1/6	63	18	21	4
32	42	RD 58*1/6	70	18	21	4
40	49	RD 65*1/6	78	18	21	4
50	62	RD 78*1/6	92	19	22	4
65	80	RD 95*1/6	112	21	25	6
80	94	RD110*1/4	127	25	29	6
90	104	RD120*1/4	138	26	30	6
100	115	RD130*1/4	148	26	31	6
125	138	RD160*1/4	178	30	35	6
150	164	RD190*1/4	210	34	40	6

צוארון לריתוך פלב"מ DIN
304 L / 316 L

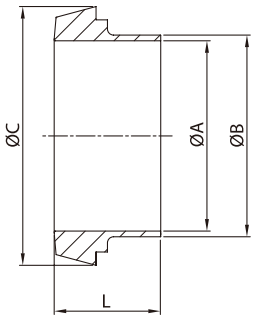

Welding Liner for Din Union

SIZE	DA		DB		ØC	L
	ØA	ØB	ØA	ØB		
10	10	13	9	12	22.5	17
15	16	19	15	18	28.5	17
20	20	23	19	22	36.5	18
25	26	29	25	28	44	22
32	32	35	31	34	50	25
40	38	41	37	40	56	26
50	50	53	49	52	68.5	28
60	57	61	57	61	76	30
65	66	70	66	70	86	32
80	81	85	81	85	100	37
100	100	104	100	104	121	44
125	125	129	125	129	150	34
150	150	154	150	154	176	37

פקק סגר לרקורד DIN
304 L / 316 L

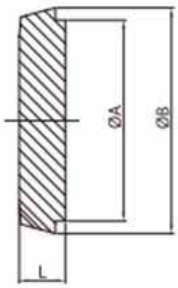

Blank Cap End for Din Union

SIZE	ØA	ØB	L
10	18	22.5	9
15	24	28.5	9
20	30	36.5	11
25	35	44	13
32	41	50	13
40	48	56	13
50	61	68.5	14
65	79	86	16
80	93	100	16
90	103	111	19
100	114	121	20
125	137	150	22
150	163	176	24

הברגה לריתוך - DIN

304 L / 316 L

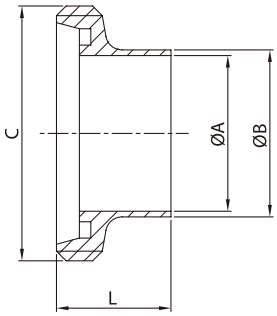

Welding Male for Din Union

SIZE	DA		DB		C	L
	ØA	ØB	ØA	ØB		
10	10	13	9	12	RD 28*1/8	21
15	16	19	15	18	RD 34*1/8	21
20	20	23	19	22	RD 44*1/6	24
25	26	29	25	28	RD 52*1/6	29
32	32	35	31	34	RD 58*1/6	32
40	38	41	37	40	RD 65*1/6	33
50	50	53	49	52	RD 78*1/6	35
60	57	61	57	61	RD 85*1/6	36
65	66	70	66	70	RD 95*1/6	40
80	81	85	81	85	RD 110*1/4	45
90	89	93	89	93	RD 120*1/4	54
100	100	104	100	104	RD 130*1/4	54
125	125	129	125	129	RD 160*1/4	46
150	150	154	150	154	RD 190*1/4	50

אטם לרקורד-DIN

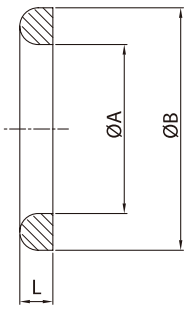

DIN SEAL RING
(EPDM - SILICONE - Viton (FKM))

SIZE	ØA	ØB	L
10	12	20	9
15	18	26	9
20	23	33	11
25	30	40	13
32	36	46	13
40	42	52	13
50	54	64	14
65	71	81	16
80	85	95	16
100	104	114	20
125	130	142	22
150	155	167	24

חלקי רקורד SMS 304/316 SMS Unions

אום עגול לרקורד SMS

304 L

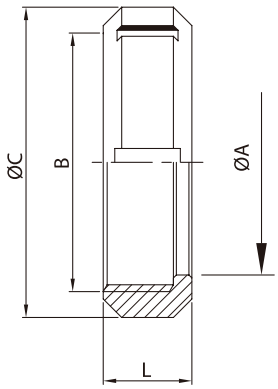

Round Nut for SMS Union SS304 6Slot

SIZE	ØA	B	ØC	L
25	32	RD 40*1/6	51	19
32	40	RD 48*1/6	60	22
38	48	RD 60*1/6	74	23
50	60.5	RD 70*1/6	84	24
63	74	RD 85*1/6	100	28
76	87	RD 98*1/6	114	30
101.6	113	RD125*1/4	138	31
104	113	RD125*1/4	138	31
101.6-B	117	RD132*1/6	150	31

צוארון לריתוך SMS

304 L / 316 L

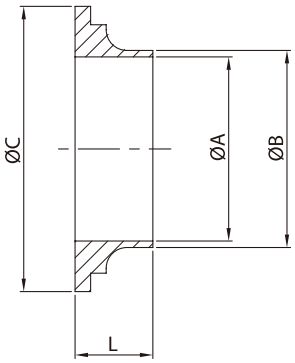

Long Welding liner SMS

SIZE	ØA	ØB	ØC	L
25	22.5	25	35.5	15.5
38	35.5	38	55	16
50	48.5	51	65	17
63	60.5	63.5	80	17
76	72.9	76.1	93	19
101.6	97.6	101.6	118	19
104	100	104	118	19
104-B	98.5	102.5	127	19

הברגה לריתוך SMS

304 L / 316 L

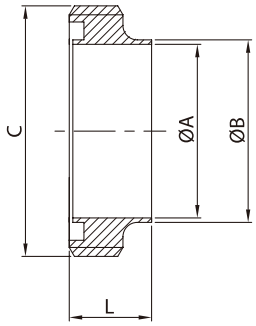

Long Welding Male for SMS Union

SIZE	ØA	ØB	ØC	L
25	22.5	25	RD 40*1/6	19
38	35.5	38	RD 60*1/6	23
50	48.5	51	RD 70*1/6	23
63	60.5	63.5	RD 85*1/6	27
76	72.9	76.1	RD 98*1/6	27
101.6	97.6	101.6	RD125*1/4	30
104	100	104	RD125*1/4	30
104-B	98.5	102.5	RD132*1/6	35

פקק סגר לרקורד SMS

304 L / 316 L

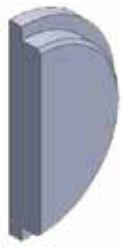

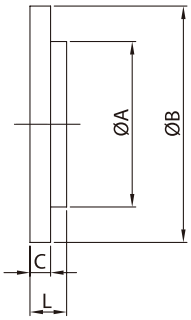

SMS- BLANK END CAP

SIZE	ØA	ØB	C	L
25	32	35.5	3.5	7.5
38	48	55	5	9
50	60	65	5	10
63	73.5	80	5	10
76	86	93	5	11
104	118	118	6	11
104-B	128	128	6	11

אטם לרקורד SMS (VITON, FKM, SILICON, EPDM)

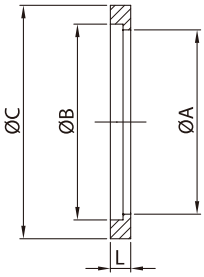

SEAL RING L TYPE(EPDM - SILICONE - VITON(FKM))

SIZE	ØA	ØB	C	L
25	22.8	25.1	31.8	5.3
38	35.8	38.1	47.8	5.3
50	48.8	51.5	60.8	5.3
63	61	63.6	73.3	5.3
76	73.4	76.1	85.8	5.3
104	100.5	104	115.7	5.3

חלקי רקורד RJT RJT Unions

אום עגול לרקורד RJT

304 L

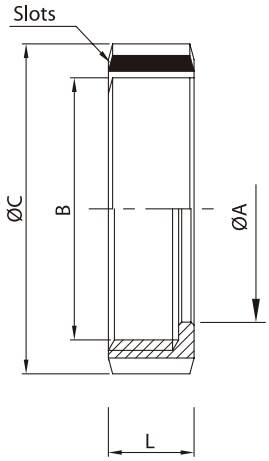

Round Nut for RJT Union SS304 4/6 Slots

SIZE	ØA	B	ØC	D	L	L1	SLOTS
1/2"	14.5	19.6 *10TP WHIT	—	28.5	16	—	—
3/4"	21	26.2 *10TP WHIT	—	33	16	—	—
1"	33.45	42.266*8TP WHIT	58.5	50.8	22.2	23.5	4
1.5"	46	54.966*8TP WHIT	74	65	22.2	23.5	4
2"	58.67	67.92 *6TP WHIT	85.5	79.4	22.2	23.5	6
2.5"	71.4	80.62 *6TP WHIT	98.5	92	22.2	23.5	6
3"	84.1	93.32 *6TP WHIT	111.6	104.8	22.2	23.5	8
4"	109.7	118.72*6TP WHIT	138	130	22.2	23.5	8
6"	163	169.52*6TP WHIT	197	184	24	—	10

צוארון לריתוך RJT

304 L / 316 L

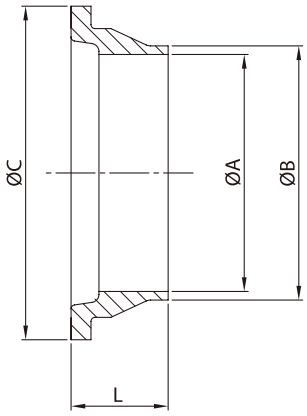

Welding Liner for RJT Union

SIZE	ØA	ØB	ØC	L
1/2"	9.6	14	18	11.4
3/4"	16	20	23.1	11.4
1"	22.1	25.4	41.3	19.5
1.5"	34.8	38.1	54	19.5
2"	47.5	50.8	66.7	19.5
2.5"	60.2	63.5	79.4	19.5
3"	72.9	76.2	92.1	19.5
4"	97.6	101.6	117.5	19.5
6"	146.86	152.4	169.1	23.5

הברגה לריתוך RJT

304 L / 316 L

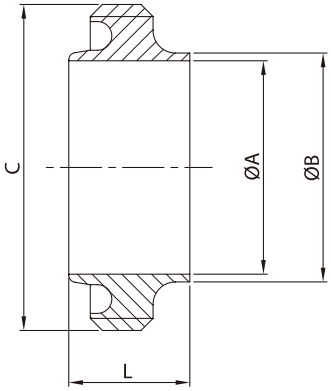

Welding Male for RJT Union

SIZE	ØA	ØB	C	L
1/2"	9.6	13.7	21.2 *10TP WHIT	16.5
3/4"	16	20	27.6 *10TP WHIT	16.5
1"	22.1	25.4	45.72 *8TP WHIT	27
1.5"	34.8	38.1	58.42 *8TP WHIT	27
2"	47.5	50.8	72.72 *6TP WHIT	27
2.5"	60.2	63.5	85.42 *6TP WHIT	27
3"	72.9	76.2	98.12 *6TP WHIT	27
4"	97.6	101.6	123.52*6TP WHIT	27
104	100	104	123.52*6TP WHIT	27
6"	146.86	152.4	174.32*6TP WHIT	24

פקק סגר לרקורד RJT

304 L / 316 L

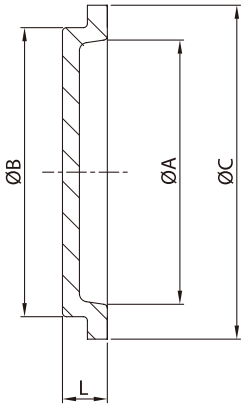

RJT- BLANK END CAP

SIZE	ØA	ØB	ØC	L
1"	37.8	32.5	41.3	9
1.5"	40.5	45.2	54	9
2"	53.2	57.9	66.7	9
2.5"	65.9	70.6	79.4	9
3"	78.2	83.3	92.1	9
4"/104	104	108.7	117.5	9

אטם לרקורד RJT

O-Ring

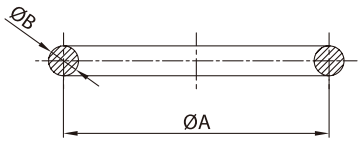

RJT-SEAL RING (EPDM/SILICON VITON(FKM)

SIZE	ØA	ØB	ØC
1"	33.3	6.6	R 3.2
1.5"	46	6.6	R 3.2
2"	58.7	6.6	R 3.2
2.5"	71.4	6.6	R 3.2
3"	84.1	6.6	R 3.2
4"	109.5	6.6	R 3.2
6"	162.6	6.6	R 3.2

רקורד קומפלט 304/316
Union Record Set
תקנים: A3, DIN
רקורדים מגיעים עם אטם EPDM

סאט פרול קומפלט 304/316
Set Ferrule

תקנים: A3, DIN

סט פרול מגיע עם אטם EPDM

ניתן להזמין ארוך/קצר

קשתות ELBOWS 304 L / 316 L

קשת קצרה 45° לריתוך 3A

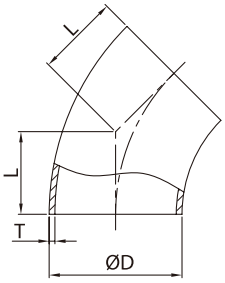

Short Elbow 45 3A W/W

SIZE	ØD	L	T
1/2"	12.7	13.16	1.65
3/4"	19.05	23.8	1.65
1"	25.4	15.8	1.65
1.5"	38.1	23.8	1.65
2"	50.8	31.75	1.65
2.5"	63.5	39.6	1.65
3"	76.2	47.6	1.65
4"	101.6	63.5	2.1
6"	152.4	95.25	2.77

קשת קצרה 45° לריתוך DIN

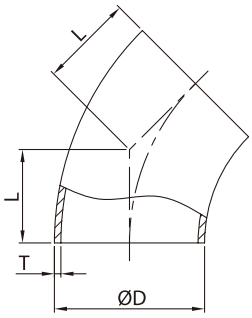

Short Elbow 45 DIN W/W

SIZE	ØD	L	T
DN20	22/23	16.6	1.5
DN25	28/29	20.7	1.5
DN32	34/35	22.8	1.5
DN40	40/41	24.9	1.5
DN50	52/53	29	1.5
DN65	70	33.1	2
DN80	85	37.3	2
DN100	104	41.4	2

קשת קצרה 45 קצוות פרול 3A

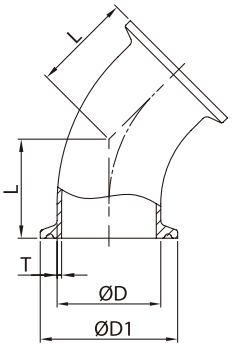

Short Elbow 45 with Ferrule End 3A

SIZE	ØD	ØD1	L	T
1/2"	12.7	25.2	19.8	1.65
3/4"	19.05	25.2	24.6	1.65
1"	25.4	50.5	28.5	1.65
1.5"	38.1	50.5	36.5	1.65
2"	50.8	64	44.45	1.65
2.5"	63.5	77.5	52.3	1.65
3"	76.2	91	60.3	1.65
4"	101.6	119	76.2	2.1
6"	152.4	166.87	117.5	2.77

304 L / 316 L

קשת קצרה 90° לריתוך 3A

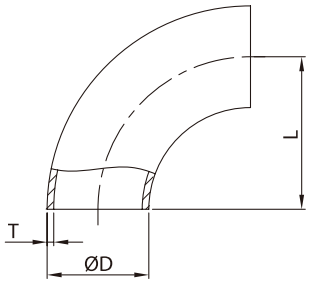

Short Elbow 90 3A W/W

SIZE	ØD	L	T
1/2"	12.7	19.05	1.65
3/4"	19.05	28.58	1.65
1"	25.4	38.1	1.65
1.5"	38.1	57.2	1.65
2"	50.8	76.2	1.65
2.5"	63.5	95.25	1.65
3"	76.2	114.3	1.65
4"	101.6	152.4	2.1
6"	152.4	228.6	2.77
8"	203.2	304.8	2.77

קשת קצרה 90° לריתוך DIN

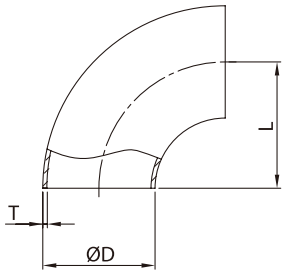

Short Elbow 90 with Ferrule End DIN

SIZE	ØD	L	T
DN10	12/13	26	1.5
DN15	18/19	35	1.5
DN20	22/23	40	1.5
DN25	28/29	50	1.5
DN32	34/35	55	1.5
DN40	40/41	60	1.5
DN50	52/53	70	1.5
DN65	70	80	2
DN80	85	90	2
DN100	101.6	152.4	2
	104	100	2

קשת קצרה 90° קצוות פרול 3A

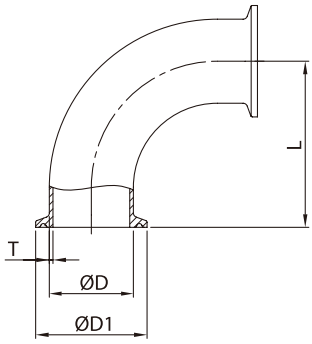

Short Elbow 90 with Ferrule End 3A

SIZE	ØD	ØD1	L	T
1/2"	12.7	25.2	41.3	1.65
3/4"	19.05	25.2	41.3	1.65
1"	25.4	50.5	50.8	1.65
1.5"	38.1	50.5	69.9	1.65
2"	50.8	64	88.9	1.65
2.5"	63.5	77.5	107.95	1.65
3"	76.2	91	127	1.65
4"	101.6	119	168.2	2.1
6"	152.4	166.87	250.8	2.77

טי סימטרי וטי מעבר

Equal Tee & Reducing Tee 304 L / 316 L

T סימטרי קצר לריתוך 3A

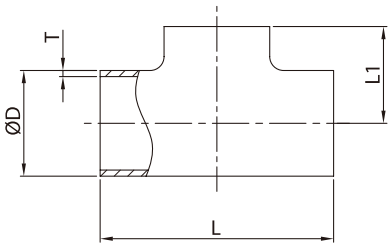

Short Equal Tee W/W 3A

SIZE	ØD	L	L1	T
1/2"	12.7	38.1	19.05	1.65
3/4"	19.05	57.2	28.6	1.65
1"	25.4	57.2	28.6	1.65
1.5"	38.1	84.2	42.1	1.65
2"	50.8	104.8	52.4	1.65
2.5"	63.5	119	59.5	1.65
3"	76.2	131.8	65.9	1.65
4"	101.6	174.6	87.3	2.1
6"	152.4	254	127	2.77

T מעבר

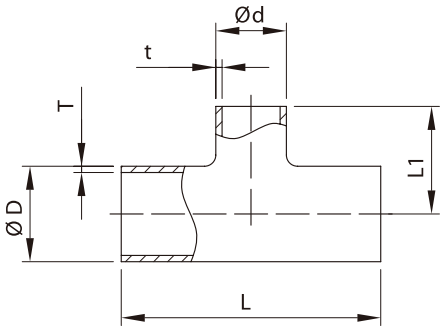

Reducing Tee W/W 3A

SIZE	ØD	Ød	L	L1	T	t
3/4"*1/2"	19.05	12.7	95.3	15.9	1.65	1.65
1.0"*1/2"	25.4	12.7	95.5	25.4	1.65	1.65
1.0"*3/4"	25.4	19.05	95.5	28.45	1.65	1.65
1.5"*1/2"	38.1	12.7	84.2	31.75	1.65	1.65
1.5"*3/4"	38.1	19.05	84.2	35.05	1.65	1.65
1.5"*1.0"	38.1	25.4	84.2	34.9	1.65	1.65
2.0"*1/2"	50.8	12.7	104.8	38.1	1.65	1.65
2.0"*3/4"	50.8	19.05	104.8	41.4	1.65	1.65
2.0"*1.0"	50.8	25.4	104.8	41.3	1.65	1.65
2.0"*1.5	50.8	38.1	104.8	48.4	1.65	1.65
2.5"*1.0"	63.5	25.4	119	47.6	1.65	1.65
2.5"*1.5"	63.5	38.1	119	54.8	1.65	1.65
2.5"*2.0"	63.5	50.8	119	58.7	1.65	1.65
3.0"*1.0"	76.2	25.4	131.8	54	1.65	1.65
3.0"*1.5"	76.2	38.1	131.8	61.1	1.65	1.65
3.0"*2.0"	76.2	50.8	131.8	65.1	1.65	1.65
3.0"*2.5"	76.2	63.5	131.8	65.9	1.65	1.65
4.0"*1.0"	101.6	25.4	174.6	66.7	2.1	1.65
4.0"*1.5"	101.6	38.1	174.6	73.8	2.1	1.65
4.0"*2.0"	101.6	50.8	174.6	77.8	2.1	1.65
4.0"*2.5"	101.6	63.5	174.6	78.6	2.1	1.65
4.0"*3.0"	101.6	76.2	174.6	80.2	2.1	1.65
6.0"*1.0"	152.4	25.4	254	111	2.77	1.65
6.0"*1.5"	152.4	38.1	254	114.3	2.77	1.65
6.0"*2.0"	152.4	50.8	254	117.5	2.77	1.65
6.0"*2.5"	152.4	63.5	254	120.7	2.77	1.65
6.0"*3.0"	152.4	76.2	254	123.8	2.77	1.65
6.0"*4.0"	152.4	101.6	254	130.2	2.77	2.1

Equal Tee & Reducing Tee

T סימטרי קצר קצוות פרול 3A

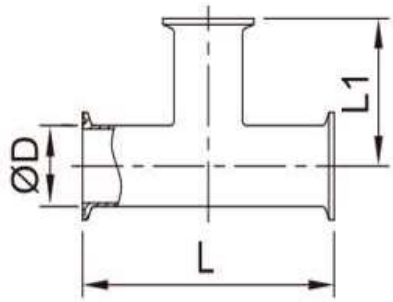

Short Equal Tee Ferrule End A3

3A	D	L1	L
1/2"	12.7	60.3	120.6
3/4"	19.05	60.3	120.6
1"	25.4	60.3	120.6
1-1/2"	38.1	69.9	139.8
2"	50.8	88.9	177.8
2-1/2"	63.5	88.9	177.8
3"	76.2	95.3	190.6
4"	101.6	114.2	228.4
6"	152.4	164.5	329
8"	203.2	199.3	398.6

T סימטרי לריתוך DIN

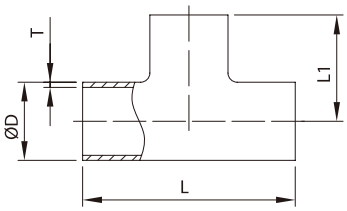

DIN EQUAL TEE W/W

SIZE	ØD	L	L1	L2	T
DN10	12/13	52	26	11	1.5
DN15	18/19	70	35	11	1.5
DN20	22/23	80	40	13	1.5
DN25	28/29	100	50	16	1.5
DN32	34/35	110	55	19.5	1.5
DN40	40/41	120	60	23	1.5
DN50	52/53	140	70	30	1.5
DN65	70	160	80	40	2
DN80	85	180	90	47.5	2
DN100	101.6	300	150	56	2
	104	200	100	58	2
DN125	129	375	187.5	74	2
DN150	154	450	225	90	2
DN200	204	600	300	115	2
DN250	254	600	300	140	2
DN300	306	600	300	166	3

צלב לריתוך A3 פלב"מ Short Cross 3A 316L

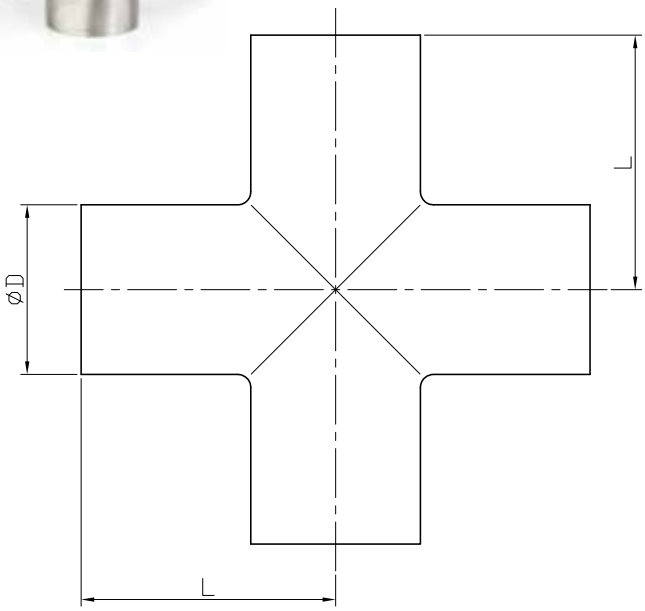

SIZE	D	L
1/2"	12.7	38
3/4"	19.1	38
1"	25.4	28.5
1-1/4"	31.8	35
1-1/2"	38.1	42
2"	50.8	52.3
2-1/2"	63.5	59.5
3"	76.2	65.9
4"	101.6	87.4
6"	152.4	127

unit:mm

צלב לריתוך DIN פלב"מ Short Cross DIN 316L

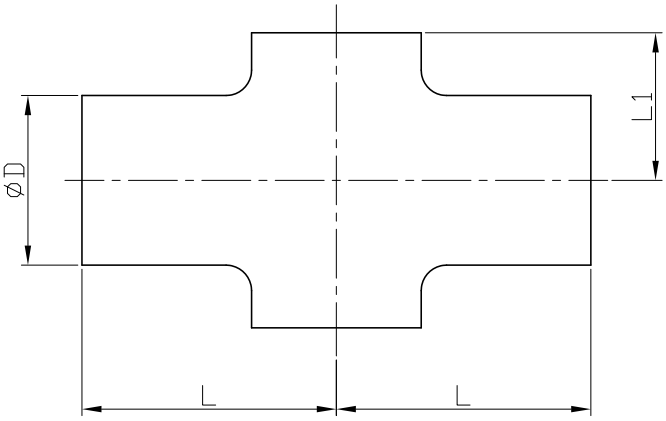

SIZE	D		L	L1
	DA	DB		
DN10	12	13	26	7.5
DN15	18	19	35	10.5
DN20	22	23	40	12.5
DN25	28	29	50	16
DN32	34	35	55	19.5
DN40	40	41	60	22.5
DN50	52	53	70	30
DN65	70		80	39.5
DN80	85		90	47.5
DN100	104		100	58
DN125	129		187	70.5
DN150	154		225	83

unit:mm

קשתות 45^0,90^0
AISI 304L/316L | תקן: 3A, DIN

מעברים קונסנטריים/ אקסנטריים
AISI 304/316L | תקן: DIN ,BS

פרול וחלקיו
AISI 304/316L | תקן: 3A

סט שלות אומי ניילוק
AISI 304

T סימטרי
AISI 304L/316L
תקן: 3A, DIN

רקורד
AISI 304/316L
תקן: SMS, RJT, DIN

חלון הסתכלות
AISI 304/316L אטמי EPDM
תקן: 3A, DIN

ברזי פרפר

מראה זרימה
AISI 304/316L אטם EPDM
תקן: 3A, DIN

שסתום אל חוזר
AISI 304/316L אטם פנימי סיליקון
תקן: 3A, DIN

מסנני קו

נשמים
נשמי פלסטיק
נשמי נירוסטה

שסתום פורק לחץ/ואקום
AISI 304/316L
תקן: DIN, SMS, RJT

T מעבר DIN 304 L / 316 L

REDUCING TEE DIN W/W

SIZE	ØD	Ød	L	L1	L2	T	t
15*10	18/19	12/13	70	29	10.5	1.5	1.5
20*10	22/23	12/13	80	31	12.5	1.5	1.5
20*15	22/23	18/19	80	37	13	1.5	1.5
25*15	28/29	18/19	100	40	16	1.5	1.5
25*20	28/29	22/23	100	43	16	1.5	1.5
32*15	34/35	18/19	110	43	19.5	1.5	1.5
32*20	34/35	22/23	110	46	19.5	1.5	1.5
32*25	34/35	28/29	110	53	19.5	1.5	1.5
40*20	40/41	22/23	120	49	22	1.5	1.5
40*25	40/41	28/29	120	56	22.5	1.5	1.5
40*32	40/41	34/35	120	58	22	1.5	1.5
50*25	52/53	28/29	140	62	28	1.5	1.5
50*32	52/53	34/35	140	64	28.5	1.5	1.5
50*40	52/53	40/41	140	66	29	1.5	1.5
65*32	70	34/35	160	72.5	37	2	1.5
65*40	70	40/41	160	74.5	37	2	1.5
65*50	70	52/53	160	78.5	38.5	2	1.5
80*40	85	40/41	180	82	45	2	1.5
80*50	85	52/53	180	86	46	2	1.5
80*65	85	70	180	87.5	47.5	2	2
100*50	104	52/53	200	95.5	55.5	2	1.5
100*65	104	70	200	97	57	2	2
100*80	104	85	200	99.5	57	2	2
125*65	129	70	375	109.5	69.5	2	2
125*80	129	85	375	112	69.5	2	2
125*100	129	104	375	112.5	70	2	2
150*80	154	85	450	124.5	82	2	2
150*100	154	104	450	125	83	2	2
150*125	154	129	450	200	86.5	2	2
200*100	204	104	600	150	108	2	2
200*125	204	129	600	225	111.5	2	2
200*150	204	154	600	250	115	2	2

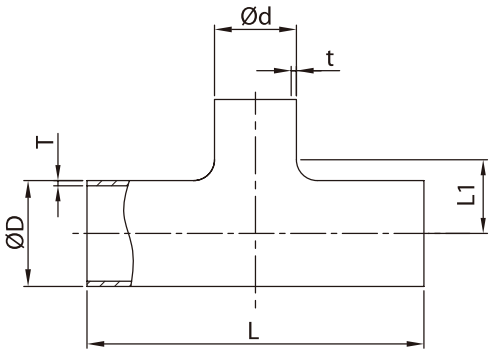

מעברי קוטר 3A 3A REDUCER 304 L / 316 L

Concentric מעבר קונסנטרי לריתוך

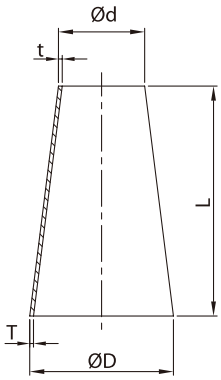

Eccentric מעבר אקסנטרי לריתוך

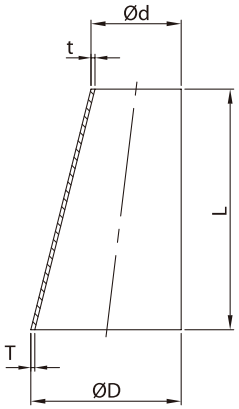

Concentric/ Eccentric Reducer W/W 3A

SIZE	ØD	Ød	L	T	t
3/4"*1/2"	19.05	12.7	25.4	1.65	1.65
1"*1/2"	25.4	12.7	50.8	1.65	1.65
1"*3/4"	25.4	19.05	25.4	1.65	1.65
1.5"*1/2"	38.1	12.7	101.6	1.65	1.65
1.5"*3/4"	38.1	19.05	76.2	1.65	1.65
1.5"*1"	38.1	25.4	50.8	1.65	1.65
2"*1/2"	50.8	12.7	152.4	1.65	1.65
2"*3/4"	50.8	19.05	127	1.65	1.65
2"*1"	50.8	25.4	101.6	1.65	1.65
2"*1.5"	50.8	38.1	50.8	1.65	1.65
2.5"*1"	63.5	25.4	152.4	1.65	1.65
2.5"*1.5"	63.5	38.1	101.6	1.65	1.65
2.5"*2"	63.5	50.8	50.8	1.65	1.65
3"*1"	76.2	25.4	203.2	1.65	1.65
3"*1.5"	76.2	38.1	152.4	1.65	1.65
3"*2"	76.2	50.8	101.6	1.65	1.65
3"*2.5"	76.2	63.5	50.8	1.65	1.65
4"*1"	101.6	25.4	304.8	2.1	1.65
4"*1.5"	101.6	38.1	254	2.1	1.65
4"*2"	101.6	50.8	203.2	2.1	1.65
4"*2.5"	101.6	63.5	152.4	2.1	1.65
4"*3"	101.6	76.2	101.6	2.1	1.65
6"*2"	152.4	50.8	139.7	2.77	1.65
6"*3"	152.4	76.2	139.7	2.77	1.65
6"*4"	152.4	101.6	139.7	2.77	2.1

* ניתן להזמין מידות שונות לפי דרישה

מעבר קונסנטרי לריתוך DIN Concentric 304 L / 316 L

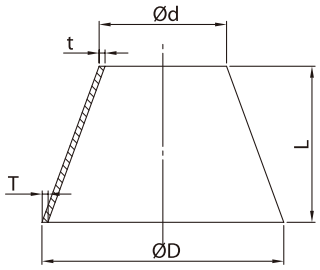

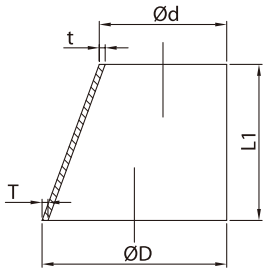

Concentric/ Eccentric Reducer W/W DIN

SIZE	ØD	Ød	L	L1	T	t
32*25	34/35	28/29	25	16.5	1.5	1.5
40*25	40/41	28/29	23	33	1.5	1.5
40*32	40/41	34/35	23	16.5	1.5	1.5
50*25	52/53	28/29	27	66	1.5	1.5
50*32	52/53	34/35	28	49.5	1.5	1.5
50*40	52/53	40/41	27	33	1.5	1.5
65*25	70	28/29	35	75	2	1.5
65*40	70	40/41	39	77	2	1.5
65*50	70	52/53	29	44	2	1.5
80*50	85	52/53	45	85	2	1.5
80*65	85	70	33	41.2	2	2
100*50	104	52/53	50	137.5	2	1.5
100*65	104	70	44	93.5	2	2
100*80	104	85	60	52.4	2	2

פרול לריתוך BPE Welding Ferrule BPE

Type A

1/2"~1"

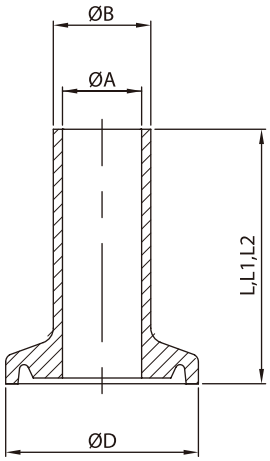

Type B

1"~6"

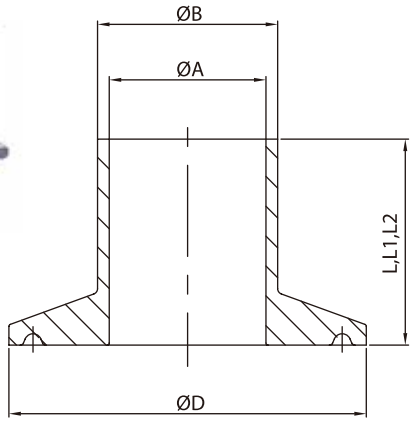

WELD FERRULE

TYPE	SIZE	ØA	ØB	ØD	L	L1	L2
A	1/4"	4.6	6.35	25	12.7	28.7	44.5
	3/8"	7.75	9.53	25	12.7	28.7	44.5
	1/2"	9.4	12.7	25	12.7	28.7	44.5
	3/4"	15.75	19.05	25	12.7	28.7	44.5
	1.0"	22.1	25.4	34	12.7	28.7	44.5
B	1.0"	22.1	25.4	50.4	12.7	28.7	44.5
	1.5"	34.8	38.1	50.4	12.7	28.7	44.5
	2.0"	47.5	50.8	63.9	12.7	28.7	57.2
	2.5"	60.2	63.5	77.4	12.7	28.7	57.2
	3.0"	72.9	76.2	90.9	12.7	28.7	57.2
	4.0"	97.4	101.6	118.9	15.9	28.7	57.2
	6.0"	146.9	152.4	166.9	19.1	38.1	76.2

פלב"מ 316

ממטרות עם גב שטוח

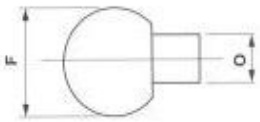

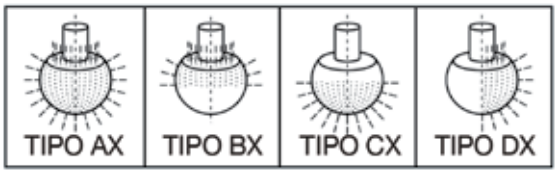

דגם	קוטר ממטרה	קוטר כניסה (פנימי/חיצוני)	קוטר נקב	ספיקה (מטר/קוב שעה)	ספיקה (ליטר/דקה)	רדיוס הפעולה (מטרים)	כמות הנקבים
CD17AX316	28	14	1.3	1.863	31.05	3.077	71
CD15AX316	40	22X20	1.6	3.78	63	11.59	49
CD1AXJ316	65	28X26	1.6	8.771	146.183	10.234	121
CD6AXJ316	65	32X30	1.6	7.906	131.767	8.314	121
CD6CX316	65	32X30	2.5	9.535	158.917	7.984	61
CD12AX316	90	38X36	2.5	22.361	372.683	5.216	177

נשמים נירוסטה/פלסטיק

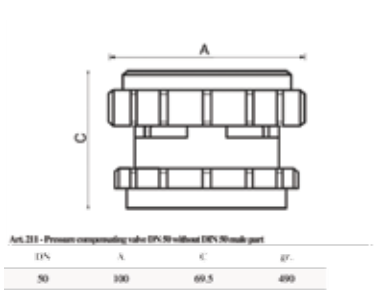

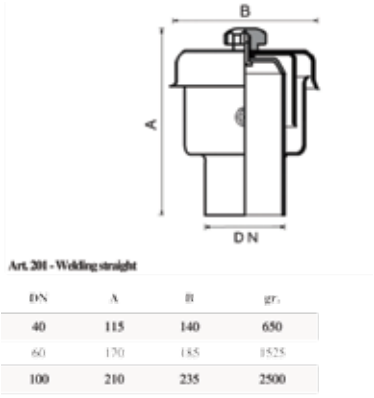

FILTERS

- Filtering parts easily extractable.
- Standard production: sheet metal filter cartridges with 1 mm holes. On request available with 0.5 mm, 2 mm or 3 mm holes and metal screen cover from 80 to 500 meshes.
- Standard finish: 120 grain external polishing and internal glazing.
- Other finishes on request.
- Maximum operating pressure: 5 bars.

LINE FILTER

1. Nut
2. Plain connection
4. Seal
5. Upper disk
6. Tie rod
7. Filter
8. Filter casing
9. Lower disk

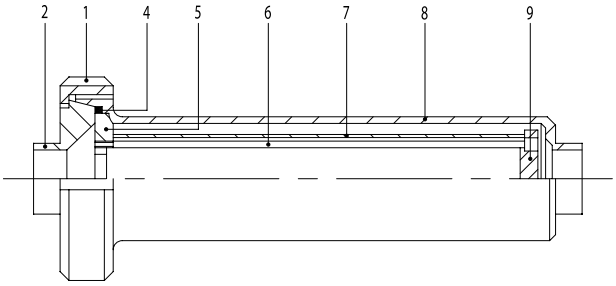

CODING

																			.
1	121	D	65	65	65	65	65	65	65	80	80	100	100	100	100	100	100	4L/6L	
2	116	D	65/25	65/28	65/34	65/38	65/40	65/51	65/52	80/63	80/70	100/76	100/85	100/101	100/101	100/104	100/104	4L/6L	
4	131	D	65	65	65	65	65	65	65	80	80	100	100	100	100	100	100	N	
5	400		25/52	25/52	25/52	25/52	25/52	25/52	25/52	63/70	63/70	76/85	76/85	101	101	101	101	6L	05
6	400		25/40	25/40	25/40	25/40	25/40	51/52	51/52	63/70	63/70	76/85	76/85	101	101	101	101	6L	06
7	400		25/52	25/52	25/52	25/52	25/52	25/52	25/52	63/70	63/70	76/85	76/85	101	101	101	101	6L	07
8	400		25/40	25/40	25/40	25/40	25/40	51/52	51/52	63/70	63/70	76/85	76/85	101	101	101	101	4L/6L	08
9	400	L	25	28	34	38	40	51	52	63	70	76	85	101	101	101	101	6L	09

* לא קיים במלאי זמין, ניתן להזמין לפי דרישה

90° Filter

LINE FILTER

1. Nut
3. Blank
4. Seal
5. Upper disk
6. Tie rod
7. Filter
8. Filter casing
9. Lower disk
10. OR seal ring

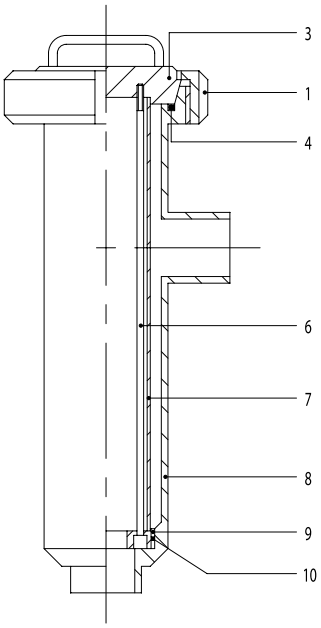

CODING

Pos.	Cod. base	Norme	1″ 25	D 25 28	D 32 34	1 1/2″ 38	D 40 40	2″ 51	D 50 52	2 1/2″ 63	D 65 70	3″ 76	D 80 85	4″ 101	D 100 101	4″ 104	D 100 104	Mat.	Part. o agg.
1	121	D	65	65	65	65	65	65	65	80	80	100	100	100	100	100	100	4L/6L	
3	410		65	65	65	65	65	65	65	80	80	100	100	100	100	100	100	4L/6L	03
4	131	D	65	65	65	65	65	65	65	80	80	100	100	100	100	100	100	N	
6	410		25/40	25/40	25/40	25/40	25/40	51/52	51/52	63/70	63/70	76/85	76/85	101	101	101	101	6L	06
7	410		25/52	25/52	25/52	25/52	25/52	25/52	25/52	63/70	63/70	76/85	76/85	101	101	101	101	6L	07
8	410		25/40	25/40	25/40	25/40	25/40	51/52	51/52	63/70	63/70	76/85	76/85	101	101	101	101	4L/6L	08
9	410	L	25	28	34	38	40	51	52	63	70	76	85	101	101	101	101	6L	09
10	OR		159	159	159	159	159	159	159	174	174	4350	4350	3375	3375	3375	3375	N	

* לא קיים במלאי זמין, ניתן להזמין לפי דרישה

FLOWRATE M3/H

Fluid speed m/sec	0,50	1,00	1,50	2,00
25,4	0,745	1,494	2,239	2,988
28	0,882	1,764	2,646	3,528
34	1,447	2,894	4,341	5,788
38,1	17,785	3,571	5,356	7,142
40	2,041	4,082	6,123	8,164
50,8	3,294	6,588	9,882	13,176
52	3,531	7,063	10,594	14,126
63,5	5,191	10,382	15,573	20,764
70	6,152	11,336	18,460	24,616
76,2	7,509	15,019	22,528	30,038
85	7,270	18,540	27,810	37,080
101,6	14,130	28,260	42,390	56,520

PRESSUREDROP

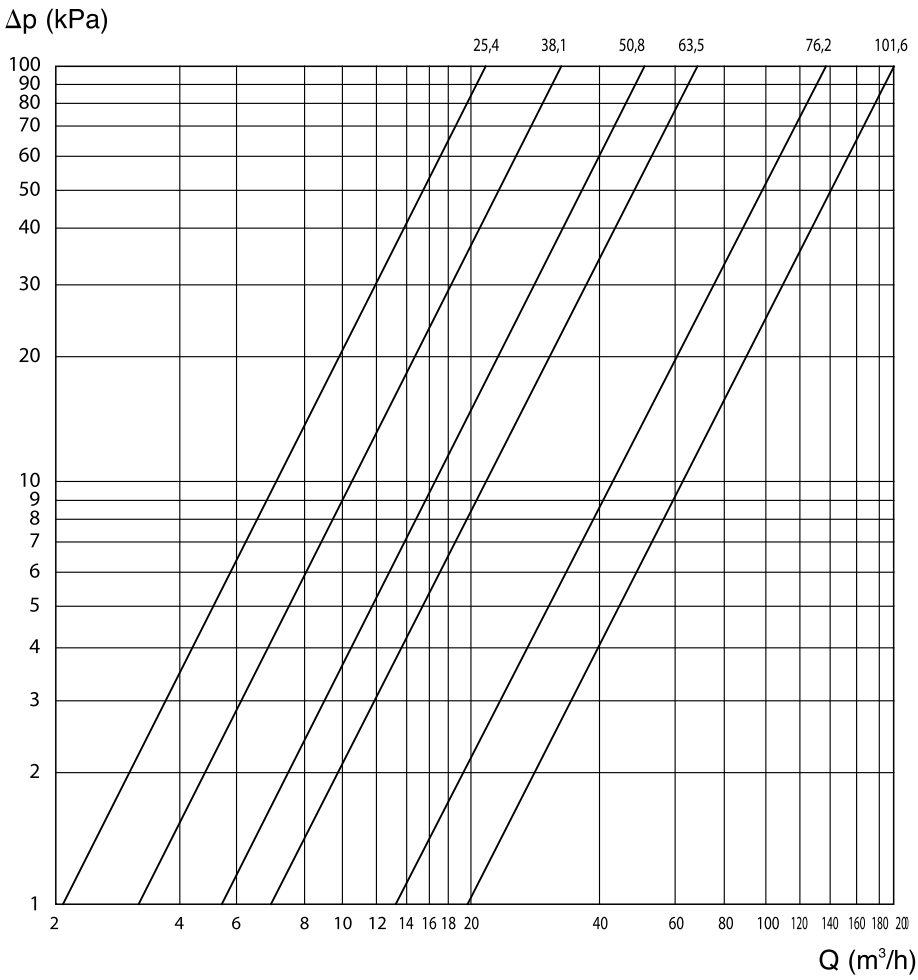

* לא קיים במלאי זמין, ניתן להזמין לפי דרישה

FILTERS DIN

LINE FILTER PE. 400 L

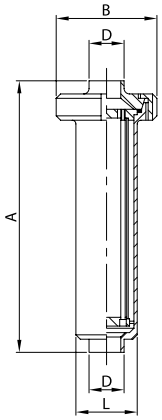

DN	A	B	D	L	gr
28	320,0	112,0	28,0	70,0	3.000
34	320,0	112,0	34,0	70,0	3.000
40	320,0	112,0	40,0	70,0	3.000
52	420,0	112,0	52,0	70,0	3.300
70	516,0	127,0	70,0	85,0	4.650
85	575,0	148,0	85,0	102,0	5.700
101	700,0	148,0	101,6	129,0	7.000
104	700,0	148,0	104,0	129,0	7.000

LINE FILTER ME./TP. EG. 401 D

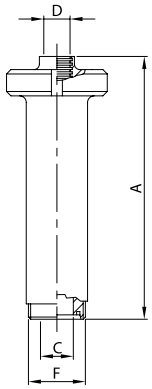

DN	A	C	D	F	gr
25	320,0	25,0	28,0	52-6	3.130
32	320,0	31,0	34,0	58-6	3.170
40	320,0	37,0	40,0	65-6	3.210
50	420,0	49,0	52,0	78-6	3.580
65	521,0	66,0	70,0	95-6	5.030
80	584,0	81,0	85,0	110-4	6.300
100	690,0	97,6	101,6	130-4	8.000
104	690,0	100,0	104,0	130-4	8.000

90° FILTER PE. 410 L

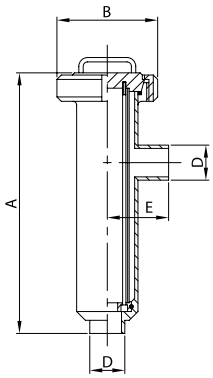

DN	A	B	D	E	gr
28	306,0	112,0	28,0	70,0	3.100
34	306,0	112,0	34,0	70,0	3.100
40	306,0	112,0	40,0	70,0	3.100
52	406,0	112,0	52,0	72,0	3.400
70	503,0	127,0	70,0	85,0	4.800
85	561,0	148,0	85,0	96,0	5.900
101	662,0	148,0	101,6	117,0	7.200
104	662,0	148,0	104,0	117,0	7.200

90° FILTER ME./PE. 411 D

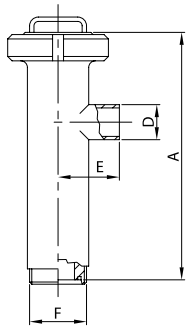

DN	A	D	E	F	gr
25	300,0	28,0	70,0	52-6	3.230
32	300,0	34,0	70,0	58-6	3.270
40	300,0	40,0	70,0	65-6	3.310
50	398,0	52,0	72,0	78-6	3.680
65	495,0	70,0	85,0	95-6	5.180
80	553,0	85,0	96,0	110-4	6.700
100	642,0	101,6	117,0	130-4	8.200
104	642,0	104,0	117,0	130-4	8.200

90°FILTER ME./ME. 412 D

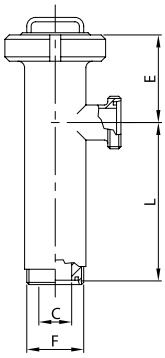

DN	C	E	F	L	gr
25	25,0	100,0	52-6	200,0	3.360
32	31,0	100,0	58-6	200,0	3.440
40	37,0	100,0	65-6	200,0	3.520
50	49,0	115,0	78-6	283,0	3.960
65	66,0	117,0	95-6	378,0	5.560
80	81,0	131,0	110-4	422,0	7.100
100	97,6	120,0	130-4	522,0	9.200
104	100,0	120,0	130-4	522,0	9.200

MESH COVERING 400 612

DN	MESH			
25/40	100/200	300	400	500
51/52	100/200	300	400	500
63/70	100/200	300	400	500
76/85	100/200	300	400	500
101/104	100/200	300	400	500

LINE FILTER CARTRIDGE 400 410

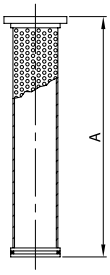

DN	A
25/40	271,0
51/52	371,0
63/70	466,0
76/85	516,0
101/104	621,0

90°FILTER CARTRIDGE 410 410

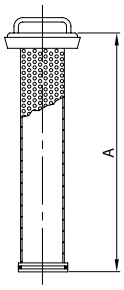

DN	A
25/40	278,0
51/52	378,0
63/70	473,0
76/85	527,0
101/104	636,0

* לא קיים במלאי זמין, ניתן להזמין לפי דרישה

FILTERS - SMS

LINE FILTER PE. 400 L

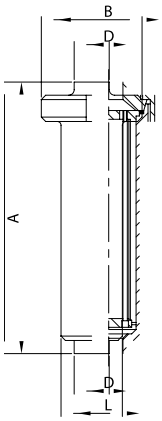

DN	A	B	D	L	gr
25	320,0	112,0	25,4	70,0	3.000
38	320,0	112,0	38,1	70,0	3.000
51	420,0	112,0	50,8	70,0	3.300
63	516,0	127,0	63,5	85,0	4.650
76	574,0	148,0	76,2	102,0	5.700
101	700,0	148,0	101,6	129,0	7.000

LINE FILTER ME./L.EG. 401 s

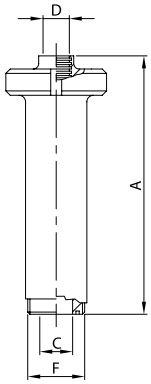

DN	A	C	D	F	gr
25	327,0	22,4	25,4	40-6	3.070
38	327,0	35,1	38,1	60-6	3.200
51	427,0	47,8	50,8	70-6	3.525
63	529,0	60,5	63,5	85-6	5.040
76	594,0	72,9	76,2	98-6	6.200
101	700,0	97,6	101,6	132-6	8.140

90° FILTER PE. 410 L

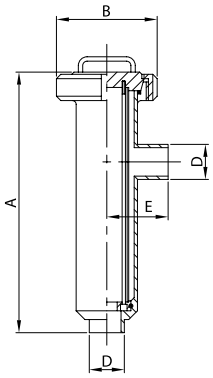

DN	A	B	D	E	gr
25	307,0	112,0	25,4	70,0	3.100
38	307,0	112,0	38,1	70,0	3.100
51	407,0	112,0	50,8	82,0	3.400
63	503,0	127,0	63,5	85,0	4.800
76	561,0	148,0	76,2	96,0	5.900
101	662,0	148,0	101,6	117,0	7.200

90° FILTER ME./PE. 411 S

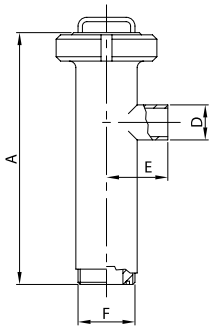

DN	A	D	E	F	gr
25	306,0	25,4	70,0	40-6	3.170
38	306,0	38,1	70,0	60-6	3.300
51	405,0	50,8	72,0	70-6	3.620
63	503,0	63,5	85,0	85-6	5.190
76	561,0	76,2	96,0	98-6	6.400
101	652,0	101,6	117,0	132-6	8.340

90°FILTER ME./ME. 412 S

DN	C	E	F	L	gr
25	22,4	99,0	40-6	207,0	3.240
38	35,1	99,0	60-6	207,0	3.500
51	47,8	115,0	70-6	290,0	3.850
63	60,5	117,0	85-6	386,0	5.580
76	72,9	131,0	98-6	430,0	6.900
101	97,6	120,0	132-6	532,0	9.480

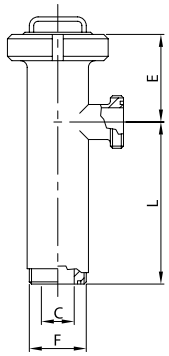

MESH COVERING 400 612

DN	MESH			
25/40	100/200	300	400	500
51/52	100/200	300	400	500
63/70	100/200	300	400	500
76/85	100/200	300	400	500
101	100/200	300	400	500

LINE FILTER CARTRIDGE 400 410

DN	A
25/40	271,0
51/52	371,0
63/70	466,0
76/85	516,0
101	621,0

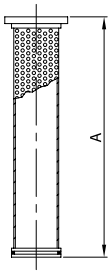

90°FILTER CARTRIDGE 410 410

DN	A
25/40	278,0
51/52	378,0
63/70	473,0
76/85	527,0
101	636,0

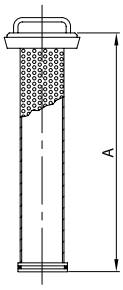

* לא קיים במלאי זמין, ניתן להזמין לפי דרישה

FILTERS RJT BS

LINE FILTER PE. 400 L

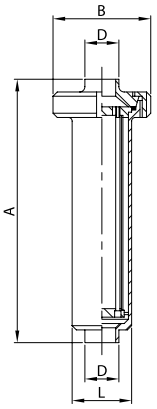

DN	A	B	D	L	gr
25	320,0	112,0	25,4	70,0	3.000
38	320,0	112,0	38,1	70,0	3.000
51	420,0	112,0	50,8	70,0	3.300
63	516,0	127,0	63,5	85,0	4.650
76	574,0	148,0	76,2	102,0	5.700
101	700,0	148,0	101,6	129,0	7.000

LINE FILTER ME./L.EG. 401 B

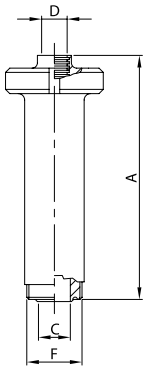

DN	A	C	D	F	gr
25	327,0	22,1	25,4	46-8	3.070
38	327,0	34,8	38,1	58-8	3.200
51	427,0	47,5	50,8	73-6	3.525
63	529,0	60,2	63,5	85-6	5.040
76	594,0	72,9	76,2	98-6	6.200
101	700,0	97,6	101,6	123-6	8.140

90° FILTER PE. 410 L

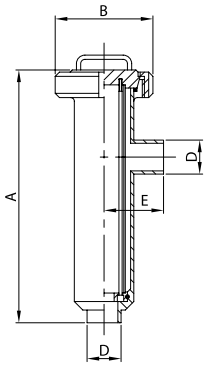

DN	A	B	D	E	gr
25	307,0	112,0	25,4	70,0	3.100
38	307,0	112,0	38,1	70,0	3.100
51	407,0	112,0	50,8	72,0	3.400
63	503,0	127,0	63,5	85,0	4.800
76	561,0	148,0	76,2	96,0	5.900
101	662,0	148,0	101,6	117,0	7.200

90° FILTER ME./PE. 411 S

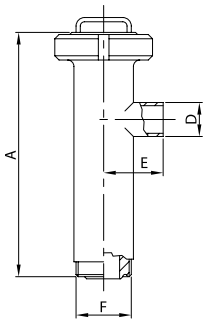

DN	A	D	E	F	gr
25	306,0	25,4	70,0	46-8	3.200
38	306,0	38,1	70,0	58-8	3.250
51	405,0	50,8	72,0	73-6	3.630
63	503,0	63,5	85,0	85-6	5.090
76	561,0	76,2	96,0	98-6	6.260
101	652,0	101,6	117,0	123-6	7.730

90°FILTER ME./ME. 412 B

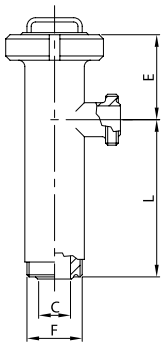

DN	C	E	F	L	gr
25	22,1	99,0	46-8	207,0	3.300
38	34,8	99,0	58-8	207,0	3.400
51	47,5	115,0	73-6	290,0	3.870
63	60,2	117,0	85-6	386,0	5.380
76	72,9	131,0	98-6	430,0	6.630
101	97,6	120,0	123-6	532,0	8.600

MESH COVERING 400 612

DN	MESH			
25/40	100/200	300	400	500
51/52	100/200	300	400	500
63/70	100/200	300	400	500
76/85	100/200	300	400	500
101	100/200	300	400	500

LINE FILTER CARTRIDGE 400 410

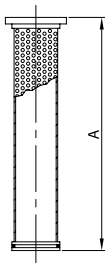

DN	A
25/40	271,0
51/52	371,0
63/70	466,0
76/85	516,0
101	621,0

90°FILTER CARTRIDGE 410 410

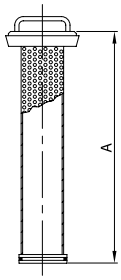

DN	A
25/40	278,0
51/52	378,0
63/70	473,0
76/85	527,0
101	636,0

* לא קיים במלאי זמין, ניתן להזמין לפי דרישה

316 L

Hose Nipple אוליבה

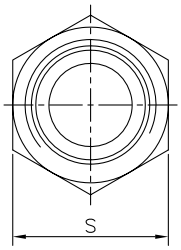

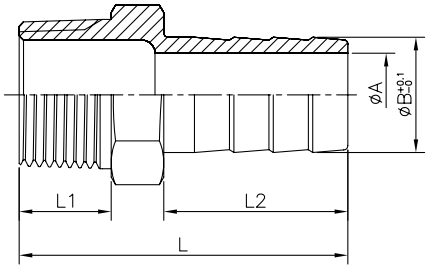

Standard Pattern

SIZE	1/8"		1/4"		3/8"		1/2"		3/4"		1"		1-1/4"		1-1/2"		2"		2-1/2"		3"		4"	
	mm	in	mm	in	mm	in	mm	in	mm	in	mm	in	mm	in	mm	in	mm	in	mm	in	mm	in	mm	in
A	3	0.12	4	0.16	5	0.2	7	0.28	15	0.59	19.5	0.77	26.5	1.04	33.5	1.32	44	1.73	54	2.13	68	2.68	91	3.58
B	6	0.24	8	0.31	10	0.39	13	0.51	20	0.79	25	0.98	32	1.26	40	1.57	51.5	2.03	63.5	2.5	76.5	3.01	102	4.02
L1	10	0.39	11.5	0.45	13	0.51	15	0.59	15.5	0.61	19	0.75	22	0.87	22	0.87	22.5	0.89	29.5	1.16	27	1.06	30.5	1.2
L2	19	0.75	25	0.98	29.5	1.16	33	1.3	34	1.34	39	1.54	37	1.46	47.5	1.87	53.5	2.11	65	2.56	68	2.68	74	2.91
L	34	1.34	43	1.69	49	1.93	56.5	2.22	60	2.36	69	2.72	70	2.76	80	3.15	88	3.46	108	4.23	110	4. 33	120	4.72
S	12.5	0.49	15	0.59	19	0.75	23	0.91	28	1.1	37	1.46	45	1.77	50	1.97	62	2.44	79	3.11	91.5	3.6	117	4.61

Tolerance: 0.5mm(1/8"~2")
0.8mm(2-1/2"~4")

Hexagon Bushing בושינג משושה

CLASS 150

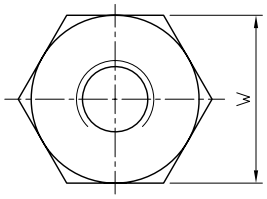

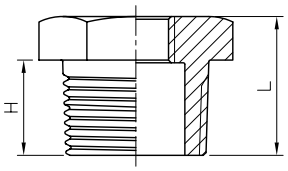

"Hexagon 1/8" - 1/2
"Octagon 3/4" - 2
"Decagon 2 1/2" -6

Standard Pattern

SIZE		H		L		W	
		mm	in	mm	in	mm	in
1/4"	1/8"	12.5	0.49	17	0.67	17	0.67
3/8"	1/8"	13	0.51	17.5	0.69	20	0.79
	1/4"	13	0.51	17.5	0.69	20	0.79
1/2"	1/8"	16	0.63	22	0.87	25	0.98
	1/4"	16	0.63	22	0.87	25	0.98
	3/8"	16	0.63	22	0.87	25	0.98
3/4"	1/8"	17	0.67	23	0.91	29.5	1.16
	1/4"	17	0.67	23	0.91	29.5	1.16
	3/8"	17	0.67	23	0.91	29.5	1.16
	1/2"	17	0.67	23	0.91	29.5	1.16
1"	1/8"	20	0.79	27	1.06	36.5	1.44
	1/4"	20	0.79	27	1.06	36.5	1.44
	3/8"	20	0.79	27	1.06	36.5	1.44
	1/2"	20	0.79	27	1.06	36.5	1.44
	3/4"	20	0.79	27	1.06	36.5	1.44
1-1/4"	1/8"	22	0.87	30	1.18	45.5	1.79
	1/4"	22	0.87	30	1.18	45.5	1.79
	3/8"	22	0.87	30	1.18	45.5	1.79
	1/2"	22	0.87	30	1.18	45.5	1.79
	3/4"	22	0.87	30	1.18	45.5	1.79
	1"	22	0.87	30	1.18	45.5	1.79
1-1/2"	1/4"	22	0.87	30	1.18	50	1.97
	3/8"	22	0.87	30	1.18	50	1.97
	1/2"	22	0.87	30	1.18	50	1.97
	3/4"	22	0.87	30	1.18	50	1.97
	1"	22	0.87	30	1.18	50	1.97
	1-1/4"	22	0.87	30	1.18	50	1.97

SIZE		H		L		W	
		mm	in	mm	in	mm	in
2"	1/4"	23.5	0.93	33.5	1.32	62	2.44
	3/8"	23.5	0.93	33.5	1.32	62	2.44
	1/2"	23.5	0.93	33.5	1.32	62	2.44
	3/4"	23.5	0.93	33.5	1.32	62	2.44
	1"	23.5	0.93	33.5	1.32	62	2.44
	1-1/4"	23.5	0.93	33.5	1.32	62	2.44
	1-1/2"	23.5	0.93	33.5	1.32	62	2.44
2-1/2"	1/2"	28.5	1.12	39.5	1.56	78	3.07
	3/4"	28.5	1.12	39.5	1.56	78	3.07
	1"	28.5	1.12	39.5	1.56	78	3.07
	1-1/4"	28.5	1.12	39.5	1.56	78	3.07
	1-1/2"	28.5	1.12	39.5	1.56	78	3.07
	2"	28.5	1.12	39.5	1.56	78	3.07
3"	1/2"	28.5	1.12	40	1.57	91	3.58
	3/4"	28.5	1.12	40	1.57	91	3.58
	1"	28.5	1.12	40	1.57	91	3.58
	1-1/4"	28.5	1.12	40	1.57	91	3.58
	1-1/2"	28.5	1.12	40	1.57	91	3.58
	2"	28.5	1.12	40	1.57	91	3.58
	2-1/2"	28.5	1.12	40	1.57	91	3.58
4"	1/2"	30	1.18	44.5	1.75	117	4.61
	3/4"	30	1.18	44.5	1.75	117	4.61
	1"	30	1.18	44.5	1.75	117	4.61
	1-1/4"	30	1.18	44.5	1.75	117	4.61
	1-1/2"	30	1.18	44.5	1.75	117	4.61
	2"	30	1.18	44.5	1.75	117	4.61
	2-1/2"	30	1.18	44.5	1.75	117	4.61
	3"	30	1.18	44.5	1.75	117	4.61

Tolerance: 0.5mm(1/8"~2")
0.8mm(2-1/2"~4")

חצי מופה Half Coupling 316 L

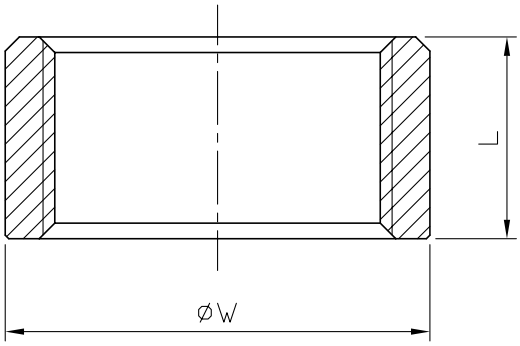

Standard Pattern

SIZE	1/8"		1/4"		3/8"		1/2"		3/4"		1"		1-1/4"		1-1/2"		2"		2-1/2" (NPT)		2-1/2" (PS)		3"		4"	
	mm	in	mm	in	mm	in	mm	in	mm	in	mm	in	mm	in	mm	in	mm	in	mm	in	mm	in	mm	in	mm	in
L	12	0.47	12	0.47	13	0.51	16.5	0.65	18.5	0.73	19.5	0.77	22.5	0.89	23	0.91	26.5	1.04	31.5	1.24	31.5	1.24	34.5	1.36	37	1.46
W	13.5	0.53	18	0.71	21.5	0.85	26	1.02	31.5	1.24	39	1.54	48	1.89	54	2.13	66.5	2.62	80	3.15	83	3.27	95	3.74	122	4.8

Tolerance: ±0.5mm(1/8"~2")
±0.8mm(2-1/2"~4")

טי סימטרי מתוברג Tee Equal BSP F/F/F

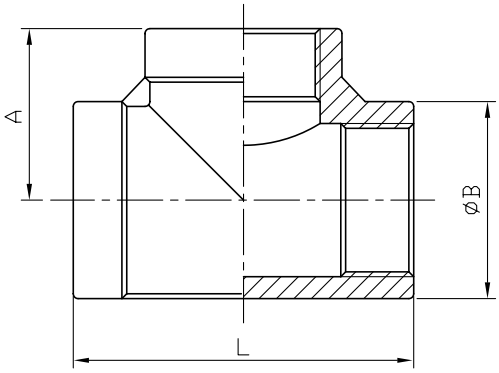

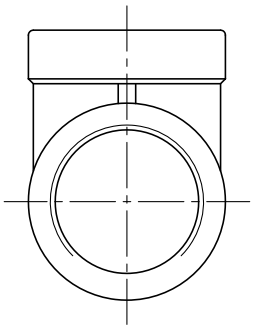

Standard Pattern

SIZE	1/8"		1/4"		3/8"		1/2"		3/4"		1"		1-1/4"		1-1/2"		2"		2-1/2" (NPT)		2-1/2" (PS)		3"		4"	
	mm	in	mm	in	mm	in	mm	in	mm	in	mm	in	mm	in	mm	in	mm	in	mm	in	mm	in	mm	in	mm	in
A	17	0.67	19.5	0.77	22	0.87	27.5	1.08	30	1.18	35	1.38	42.5	1.67	44.5	1.75	53.5	2.11	68	2.68	66	2.6	72	2.83	91	3.58
B	15	0.59	18.5	0.73	22	0.87	25.5	1	32.2	1.27	39.5	1.56	49	1.93	56	2.2	67.6	2.66	84.5	3.33	87.5	3.44	100	3.94	126	4.96
L	34	1.34	39	1.54	44	1.73	55	2.17	60	2.36	70	2.76	85	3.35	88.5	3.48	107	4.21	128	5.04	129	5.08	144	5.67	180	7.09

Tolerance: ±0.5mm(1/8"~2")
±0.8mm(2-1/2"~4")

כיפה נקבה משושה Hexagon Cap

316 L

Standard Pattern

SIZE	H		S	
	mm	in	mm	in
1/8"	15.5	0.61	14.2	0.56
1/4"	17	0.67	17.5	0.69
3/8"	17.5	0.69	21.2	0.83
1/2"	20	0.79	25.5	1
3/4"	20.4	0.8	30.1	1.19
1"	27.1	1.07	37.4	1.47
1-1/4"	30	1.18	47	1.85
1-1/2"	30.3	1.19	53.2	2.09
2"	32.3	1.27	66	2.6
2-1/2"	35.2	1.39	81	3.19
3"	38.4	1.51	95.8	3.77
4"	41	1.61	122.2	4.81

Tolerance: ±0.5mm(1/8"~2")
±0.8mm(2-1/2"~4")

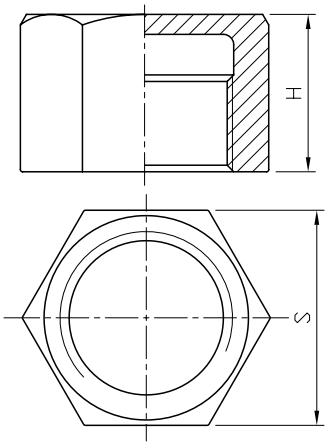

מופה מעבר Reducing Socket

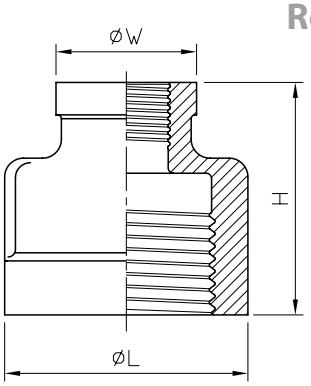

Standard Pattern

SIZE		L		H		W	
		mm	in	mm	in	mm	in
1/4"	1/8"	18	0.71	24	0.94	15.5	0.61
3/8"	1/8"	22	0.87	29	1.14	18.1	0.71
	1/4"	22	0.87	29	1.14	18.2	0.72
1/2"	1/8"	28	1.1	34	1.34	19.5	0.77
	1/4"	28.5	1.12	34	1.34	19.5	0.77
	3/8"	28.5	1.12	34.5	1.36	23	0.91
3/4"	1/8"	34	1.34	34.5	1.36	18.5	0.73
	1/4"	34	1.34	34.5	1.36	18.5	0.73
	3/8"	34	1.34	36.5	1.44	28.2	1.11
	1/2"	34	1.34	36.5	1.44	28	1.1
1"	1/8"	41.5	1.63	40	1.57	19.5	0.77
	1/4"	41.5	1.63	40	1.57	19.5	0.77
	3/8"	41.5	1.63	41.5	1.63	28.5	1.12
	1/2"	41.5	1.63	42	1.65	29	1.14
	3/4"	41.5	1.63	41.5	1.63	34	1.34
1-1/4"	1/8"	50.5	1.99	42	1.65	22	0.87
	1/4"	50.5	1.99	42	1.65	22	0.87
	3/8"	50.5	1.99	42	1.65	22	0.87
	1/2"	50	1.97	46	1.81	33.7	1.33
	3/4"	50	1.97	46	1.81	34	1.34
	1"	50	1.97	47	1.85	41.6	1.64
1-1/2"	1/8"	57.5	2.26	43.5	1.71	22	0.87
	1/4"	57.5	2.26	43.5	1.71	22	0.87
	3/8"	57.5	2.26	43.5	1.71	22	0.87

SIZE		L		H		W	
		mm	in	mm	in	mm	in
1-1/2"	1/2"	57	2.24	47	1.85	33.6	1.32
	3/4"	57.5	2.26	47.5	1.87	34	1.34
	1"	57	2.24	50	1.97	41.5	1.63
	1-1/4"	57	2.24	51.5	2.03	50	1.97
2"	1/4"	70	2.76	51	2.01	28.5	1.12
	3/8"	71	2.8	51	2.01	28.5	1.12
	1/2"	70	2.76	51	2.01	28.5	1.12
	3/4"	69.5	2.74	55	2.17	41	1.61
	1"	69.5	2. 74	55	2.17	41	1.61
	1-1/4"	70	2.76	59	2.32	56.5	2.22
	1-1/2"	70	2.76	59	2.32	57	2.24
2-1/2"	1"	88	3.46	59.5	2.34	50	1.97
	1-1/4"	88	3.46	59.5	2.34	50	1.97
	1-1/2"	88	3.46	61	2.4	57	2.24
	2"	87	3.43	61	2.4	69.5	2.74
3"	3/4"	101	3.98	61.5	2.42	41.5	1.63
	1"	101	3.98	61.5	2.42	41.5	1.63
	1-1/4"	103	4.06	65.5	2.58	50.5	1.9 9
	1-1/2"	103	4.06	65	2.56	57	2.24
	2"	103	4.06	65	2.56	73.5	2.89
	2-1/2"	102	4.02	70.5	2.78	88.5	3.48
4"	2"	128.5	5.06	66	2.6	72.5	2.85
	2-1/2"	128.5	5.06	71	2.8	88	3.46
	3"	130	5.12	77	3.03	102	4.02

Tolerance: 0.5mm(1/8"~2")
0.8mm(2-1/2"~4")

מופה Coupling 316 L

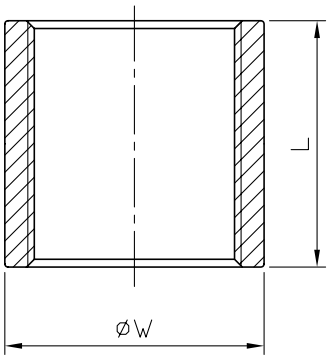

Standard Pattern

SIZE	1/8"		1/4"		3/8"		1/2"		3/4"		1"		1-1/4"		1-1/2"		2"		2-1/2"		3"		4"	
	mm	in	mm	in	mm	in	mm	in	mm	in	mm	in	mm	in	mm	in	mm	in	mm	in	mm	in	mm	in
L	20	0.79	25	0.98	25	0.98	33	1.3	35	1.38	42.5	1.67	46.5	1.83	46	1.81	54.5	2.15	65	2.56	69	2.72	79	3.11
W	13.5	0.53	18	0.71	21.5	0.85	26	1.02	31.5	1.24	39	1.54	47.5	1.87	54	2.13	66.5	2.62	83	3.27	95	3.74	122	4.8

Tolerance: ±0.5mm(1/8"~2")
±0.8mm(2-1/2"~4")

ניפל כפול Barrel Nipple

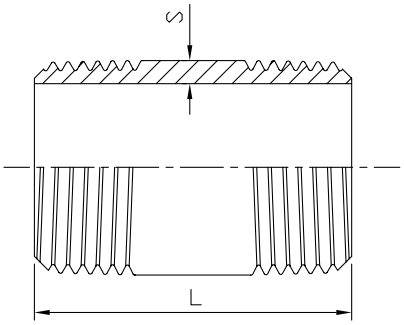

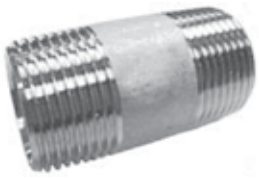

Standard Pattern

SIZE	1/8"		1/4"		3/8"		1/2"		3/4"		1"		1-1/4"		1-1/2"		2"		2-1/2"		3"		4"	
	mm	in	mm	in	mm	in	mm	in	mm	in	mm	in	mm	in	mm	in	mm	in	mm	in	mm	in	mm	in
S	1.7	0.07	2	0.08	2	0.08	2.5	0.1	2.5	0.1	3.2	0.13	3.2	0.13	3.2	0.13	3.6	0.14	3.6	0.14	4	0.16	4.5	0.18
L	40	1.57	40	1.57	40	1.57	60	2.36	60	2.36	60	2.36	80	3.15	80	3.15	100	3.94	100	3.94	120	4.72	120	4.72

Tolerance: ±0.5mm(1/8"~2")
±0.8mm(2-1/2"~4")

ניפל מעבר Reducing Nipple

316 L

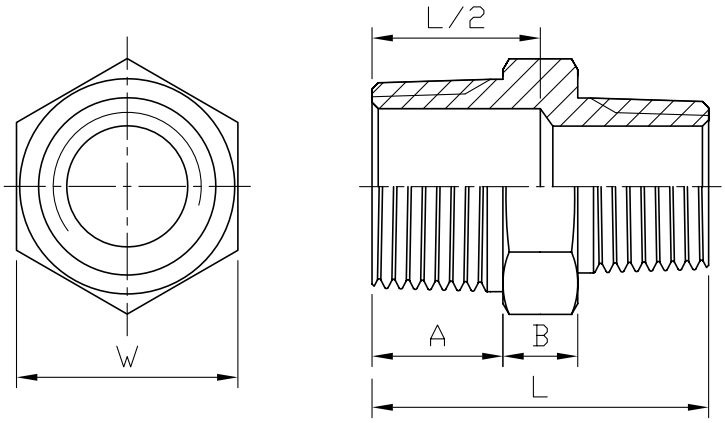

Hexagon 1/8" - 1/2"
Octagon 3/4" - 2"
Decagon 2 1/2" -6"

Standard Pattern

SIZE		A		B		L		W	
		mm	in	mm	in	mm	in	mm	in
1/4"	1/8"	13	0.51	6	0.24	31	1.22	15.1	0.59
3/8"	1/8"	14	0.55	7	0.28	34	1.34	18.6	0.73
	1/4"	14	0.55	7	0.28	34	1.34	18.6	0.73
1/2"	1/8"	16.5	0.65	8	0.31	36.5	1.44	23	0.91
	1/4"	16.5	0.65	8	0.31	36.5	1.44	23	0.91
	3/8"	16.5	0.65	8	0.31	36.5	1.44	23	0.91
3/4"	1/8"	16	0.63	8	0.31	40	1.57	29	1.14
	1/4"	16	0.63	8	0.31	40	1.57	29	1.14
	3/8"	17	0.67	8	0.31	41	1.61	28.5	1.12
	1/2"	17	0.67	8	0.31	41.5	1.63	28.5	1.12
1"	1/4"	20	0.79	9	0.35	41	1.61	35.4	1.39
	3/8"	20	0.79	9	0.35	42.5	1.67	35.4	1.39
	1/2"	20	0.79	9	0.35	45	1.77	35.4	1.39
	3/4"	20	0.79	9	0.35	45	1.77	35.4	1.39
1-1/4"	1/4"	21	0.83	10	0.39	42	1.65	44.5	1.75
	3/8"	21	0.83	10	0.39	47	1.85	44.5	1.75
	1/2"	21	0.83	10	0.39	49	1.93	44.5	1.75
	3/4"	21	0.83	10	0.39	49	1.93	44.5	1.75
	1"	22	0.87	10	0.39	52	2.05	44.5	1.75
1-1/2"	1/4"	20	0.79	10.5	0.41	42.5	1.67	51	2.01
	3/8"	21	0.83	10	0.39	47	1.85	50	1.97
	1/2"	21	0.83	10	0.39	49	1.93	50	1.97
	3/4"	21	0.83	10	0.39	49	1.93	50	1.97
	1"	21.5	0.85	11	0.43	52.5	2.07	50	1.97
	1-1/4"	22	0.87	11	0.43	55	2.17	51	2.01
2"	3/8"	23	0.91	11	0.43	52	2.05	61.5	2.42
	1/2"	23	0.91	11	0.43	52	2.05	61.5	2.42
	3/4"	23	0.91	11	0.43	41.5	1.63	61.5	2.42
	1"	23	0.91	11	0.43	53.5	2.11	61.5	2.42
	1-1/4"	23	0.91	11	0.43	56	2.2	61.5	2.42
	1-1/2"	23	0.91	11	0.43	55.5	2.19	61.5	2.42
2-1/2"	3/4"	27.5	1.08	13	0.51	64	2.52	78	3.07
	1"	27.5	1.08	13	0.51	63.5	2.5	78	3.07
	1-1/4"	27.5	1.08	13	0.51	63.5	2.5	78	3.07
	1-1/2"	27.5	1.08	13	0.51	63.5	2.5	78	3.07
	2"	27.5	1.08	13	0.51	65.5	2.58	78	3.07
3"	1-1/2"	28	1.1	15	0.59	68	2.68	92	3.62
	2"	28	1.1	15	0.59	68.5	2.7	93	3.66
	2-1/2"	28.5	1.12	15	0.59	71	2.8	92	3.62
4"	2"	30	1.18	15	0.59	75	2.95	117	4.61
	2-1/2"	30	1.18	15	0.59	75	2.95	117	4.61
	3"	30	1.18	15	0.59	75	2.95	117	4.61

Tolerance: ±0.5mm(1/8"~2")
±0.8mm(2-1/2"~4")

פקק זכר משושה Hexagon Plug 316 L

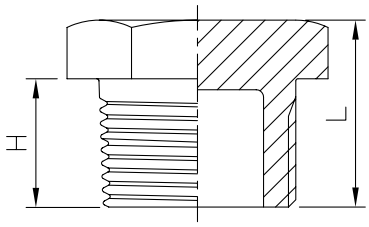

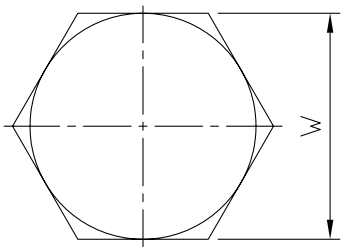

1/8"~2"

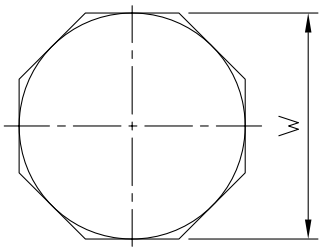

2-1/2"~4"

Standard Pattern

SIZE	1/8"		1/4"		3/8"		1/2"		3/4"		1"		1-1/4"		1-1/2"		2"		2-1/2"		3"		4"	
	mm	in	mm	in	mm	in	mm	in	mm	in	mm	in	mm	in	mm	in	mm	in	mm	in	mm	in	mm	in
H	10.5	0.41	12	0.47	13.5	0.53	16	0.63	16.5	0.65	19	0.75	21	0.83	21	0.83	22.8	0.9	29	1.14	29.3	1.15	30.8	1.21
L	16.2	0.64	18	0.71	19.5	0.77	22.6	0.89	23.3	0.92	26.8	1.06	30.5	1.2	30.8	1.21	34	1.34	40.5	1.59	41.7	1.64	44.8	1.76
W	13.2	0.52	16.6	0.65	19.3	0.76	25.2	0.99	29.7	1.17	36.5	1.44	45.3	1.78	51.4	2.02	62.5	2.46	79.5	3.13	92	3.62	117.5	4.63

Tolerance: ±0.5mm(1/8"~2")
±0.8mm(2-1/2"~4")

צלב CROSS

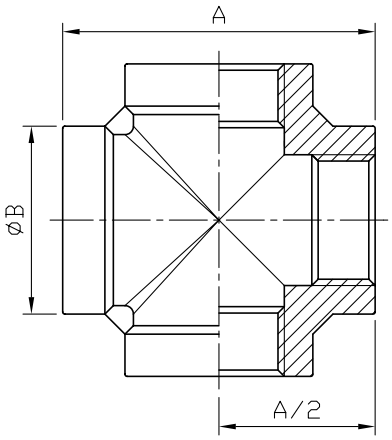

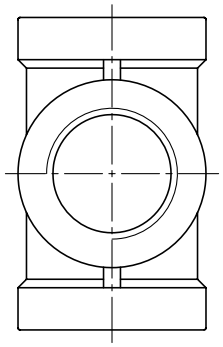

Standard Pattern

SIZE	1/8"		1/4"		3/8"		1/2"		3/4"		1"		1-1/4"		1-1/2"		2"		2-1/2" (NPT)		2-1/2" (PS)		3"		4"	
	mm	in	mm	in	mm	in	mm	in	mm	in	mm	in	mm	in	mm	in	mm	in	mm	in	mm	in	mm	in	mm	in
A	34.1	1.34	38	1.5	44	1.73	55	2.17	63.4	2.5	73.2	2.88	85.6	3.37	89.8	3.54	108	4.25	128	5.04	137.2	5.4	143	5.63	180	7.09
B	14.8	0.58	18.5	0.73	22.1	0.87	28.8	1.13	33.7	1.33	42	1.65	50.4	1.98	57.1	2.25	69.2	2.72	85	3.35	89.2	3.51	99.5	3.92	126	4.96

Tolerance: ±0.5mm(1/8"~2")
±0.8mm(2-1/2"~4")

316 L

קשת 45 - נקבה/נקבה Elbow 45 F/F

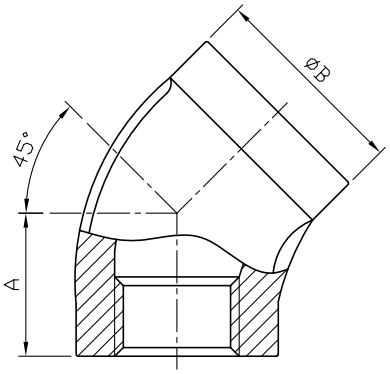

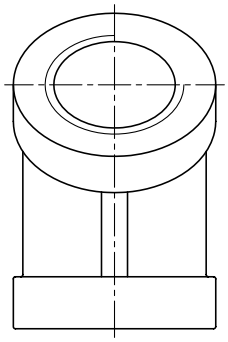

Standard Pattern

SIZE	1/8		1/4		3/8		1/2		3/4		1		1-1/4		1-1/2		2		2-1/2		3		4	
	mm	in	mm	in	mm	in	mm	in	mm	in	mm	in	mm	in	mm	in	mm	in	mm	in	mm	in	mm	in
A	15	0.59	16	0.63	18	0.71	20	0.79	24	0.94	27	1.06	31	1.22	34	1.34	39	1.54	46	1.81	52	2.05	63	2.48
B	16	0.63	18.4	0.72	22	0.87	29	1.14	32	1.26	42	1.65	48.4	1.91	57	2.24	70	2.76	88	3.46	101	3.98	127.6	5.02

Tolerance: ±0.5mm(1/8"~2")
±0.8mm(2-1/2"~4")

קשת 90 - נקבה/נקבה Elbow 90 F/F

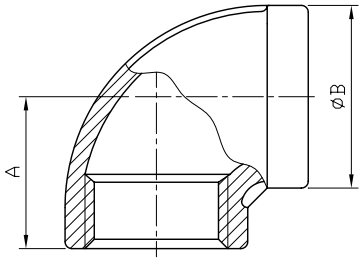

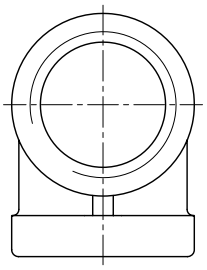

Standard Pattern

SIZE	1/8"		1/4"		3/8"		1/2"		3/4"		1"		1-1/4"		1-1/2"		2"		2-1/2" (NPT)		2-1/2" (PS)		3"		4"	
	mm	in	mm	in	mm	in	mm	in	mm	in	mm	in	mm	in	mm	in	mm	in	mm	in	mm	in	mm	in	mm	in
A	17	0.67	19	0.75	21.5	0.85	27	1.06	30	1.18	35	1.38	43	1.69	45	1.77	54	2.13	69	2.72	69	2.72	72	2.83	89	3.5
B	15.5	0.61	18.8	0.74	22.5	0.89	25.5	1	31.6	1.24	41.2	1.62	48.5	1.91	54.9	2.16	67.4	2.65	81.3	3.2	83.6	3.29	100.5	3.96	126.5	4.98

Tolerance: ±0.5mm(1/8"~2")
±0.8mm(2-1/2"~4")

ניפל Thread Nipple BSP

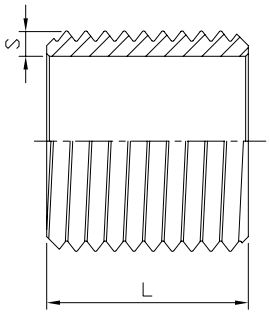

Standard Pattern

SIZE	1/8"		1/4"		3/8"		1/2"		3/4"		1"		1-1/4"		1-1/2"		2"		2-1/2"		3"		4"	
	mm	in	mm	in	mm	in	mm	in	mm	in	mm	in	mm	in	mm	in	mm	in	mm	in	mm	in	mm	in
S	1.7	0.07	2	0.08	1.9	0.07	2.3	0.09	2.5	0.1	3.2	0.13	3.2	0.13	3.2	0.13	3.6	0.14	3.6	0.14	4	0.16	4.5	0.18
L	16	0.63	18	0.71	22	0.87	25	0.98	30	1.18	35	1.38	38	1.5	38	1.5	45	1.77	55	2.17	60	2.36	70	2.76

Tolerance: ±0.5mm(1/8"~2")
±0.8mm(2-1/2"~4")

ניפל משושה Hexagon Nipple 316 L

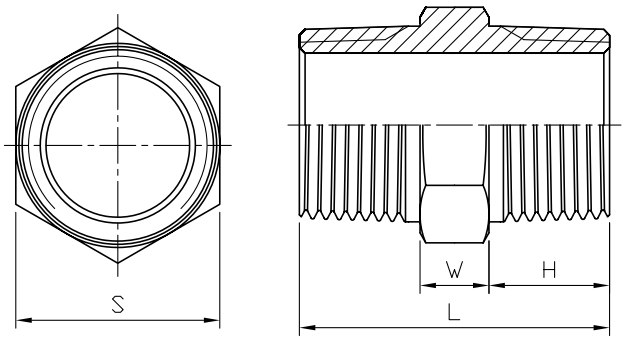

Hexagon 1/8" - 1/2"
Octagon 3/4" - 2"
Decagon 2 1/2" -6"

Standard Pattern

SIZE	1/8"		1/4"		3/8"		1/2"		3/4"		1"		1-1/4"		1-1/2"		2"		2-1/2"		3"		4"	
	mm	in	mm	in	mm	in	mm	in	mm	in	mm	in	mm	in	mm	in	mm	in	mm	in	mm	in	mm	in
W	5.7	0.22	6	0.24	6.1	0.24	7.6	0.3	8.4	0.33	8.3	0.33	10	0.39	10.2	0.4	10.6	0.42	13.1	0.52	13	0.51	14.5	0.57
H	12.2	0.48	13	0.51	13	0.51	17.2	0.68	17.6	0.69	20.4	0.8	20.8	0.82	20.7	0.81	22	0.87	25	0.98	27.5	1.08	30.3	1.19
S	13.3	0.52	15.2	0.6	18.5	0.73	23	0.91	29	1.14	35	1.38	44	1.73	50	1.97	62	2.44	78	3.07	91	3.58	117	4.61
L	30	1.18	32	1.26	32	1.26	42	1.65	43.5	1.71	49	1.93	51.5	2.03	51.5	2.03	54.5	2.15	63	2.48	68	2.68	75	2.95

Tolerance: ±0.5mm(1/8"~2")
±0.8mm(2-1/2"~4")

316 L

קשת 90 - זכר/נקבה Street Elbow 90° M/F

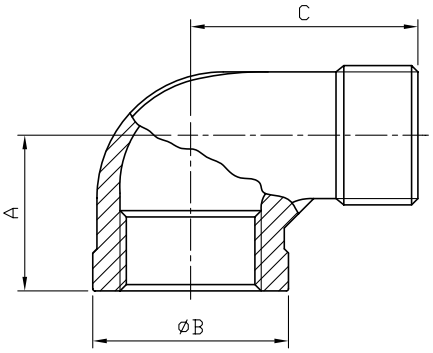

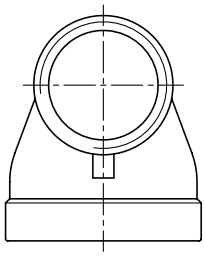

Standard Pattern

SIZE	1/8"		1/4"		3/8"		1/2"		3/4"		1"		1-1/4"		1-1/2"		2"		2-1/2" (NPT)		2-1/2" (PS)		3"		4"	
	mm	in	mm	in	mm	in	mm	in	mm	in	mm	in	mm	in	mm	in	mm	in	mm	in	mm	in	mm	in	mm	in
A	19	0.75	21.5	0.85	24.5	0.96	29	1.14	33.5	1.32	37	1.46	43	1.69	47	1.85	57.5	2.26	66	2.6	66	2.6	74	2.91	90	3.54
B	15	0.59	20.5	0.81	24	0.94	28.4	1.12	34.3	1.35	41	1.61	51	2.01	56.5	2.22	69.5	2.74	84	3.31	87.4	3.44	101.8	4.01	128	5.04
C	26.5	1.04	30.8	1.21	36.5	1.44	41	1.61	48	1.89	55	2.17	62	2.44	67	2.64	77.5	3.05	93	3.66	93	3.66	107	4.21	130	5.12

Tolerance: ±0.5mm(1/8"~2")
±0.8mm(2-1/2"~4")

קשת 45 - זכר/נקבה Street Elbow 45 M/F

Standard Pattern

SIZE	A		B		C	
	mm	in	mm	in	mm	in
1/4"	17	0.67	16.5	0.65	18.1	0.71
3/8"	19.5	0.77	18.5	0.73	21.5	0.85
1/2"	20.5	0.81	21	0.83	27.5	1.08
3/4"	23.5	0.93	24.5	0.96	34	1.34
1"	27.5	1.08	27.5	1.1	42.5	1.67
1-1/4"	30	1.18	33	1.3	50.5	1.99
1-1/2"	29.5	1.16	36.5	1.44	58.5	2.3
2"	33	1.3	40.5	1.59	72	2.83

Tolerance: ±0.5mm(1/4"~2")

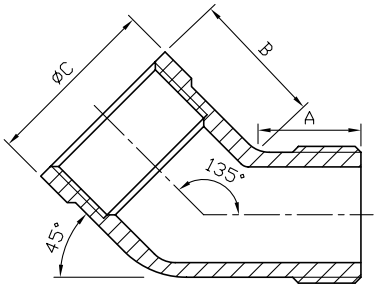

שסתום א"ח קפיץ פלב"מ
PTFE BSP 316 נ/נ

Similar 2PC spring ver. check .316 BSP F/F

Size	M	D	L	A
1/4"	1/4"	10	51/3	21
3/8"	3/8"	11	51/3	21
1/2"	1/2"	15	57	25
3/4"	3/4"	20	63/6	30/5
1"	1"	25	76/6	37
11/4"	11/4"	32	88.5	45.5
11/2"	11/2"	40	101.8	52.5
2"	2"	50	114.3	65
21/2"	21/2"	65	149.2	81.5
3"	3"	80	170.2	97
4"	4"	100	166.1	124

No.	Part Time	Material	Q'TY
1	cap	CF8/CF8M	1
2	END SEAL	PTFE	1
3	VALVE CORE B	304/316	1
4	SPRING	304/316	1
5	BODY	CF8/CF8M	1
6	SEAL	NBR	1

2PC Vertical Check Valve F/F
Features:
1. Pressure Rating: 1000PSI from DN08 to DN65 and 800PSI from DN80 to DN100
2.Working Temperature: -20°C to +180°C
3. Investment Casting
4. PED 2014/68/EU
5. Casting Approved AD2000-WO
6. Thread: DIN2999/259, ISO228-1, ISO7/1, NPT
7. Inspection Testing: API598, EN12266-1

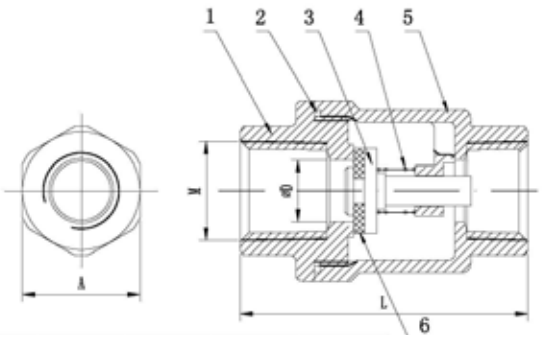

רקורד - נקבה/נקבה קוני ללא אטם Conical Union BSP F/F 316L

A VIEW

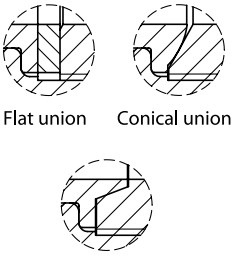

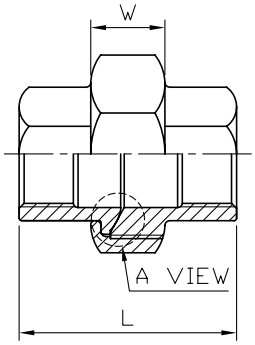

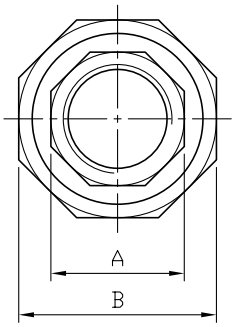

1/8"~1/4" Hexagon
3/8"~1" Octagon
1-1/4"~4" Decagon

Standard Pattern

SIZE	1/8"		1/4"		3/8"		1/2"		3/4"		1"		1-1/4"		1-1/2"		2"		2-1/2"		3"		4"	
	mm	in	mm	in	mm	in	mm	in	mm	in	mm	in	mm	in	mm	in	mm	in	mm	in	mm	in	mm	in
L	34.5	1.36	34.5	1.36	37.6	1.48	38.6	1.52	44	1.73	51	2.01	58	2.28	59	2.32	61.5	2.42	71	2.8	90	3.54	97	3.82
A	17.2	0.68	17.5	0.69	20.5	0.81	26.5	1.04	31.2	1.23	38	1.5	47.5	1.87	54	2.13	67	2.64	83	3.27	96	3.78	122.5	4.82
B	28	1.1	28	1.1	34	1.34	39.2	1.54	46	1.81	55	2.17	63.5	2.5	71	2.8	85	3.35	105.5	4.15	123.7	4.87	153.5	6.04
W	12.2	0.48	12.2	0.48	15	0.59	15	0.59	15	0.59	17	0.67	20	0.79	20	0.79	20.8	0.82	24	0.94	28	1.1	33	1.3

Tolerance: ±0.5mm(1/8"~2")
±0.8mm(2-1/2"~4")

רקורד - נקבה/נקבה קוני עם אטם טפלון Flat Union BSP F/F 316 PTFE

Machining Tolerance	
Dimension	Tolerance
0.5-3	± 0.1
>3-6	±0.1
>6-30	±0.1
>30-120	±0.3
>120-400	±0.5

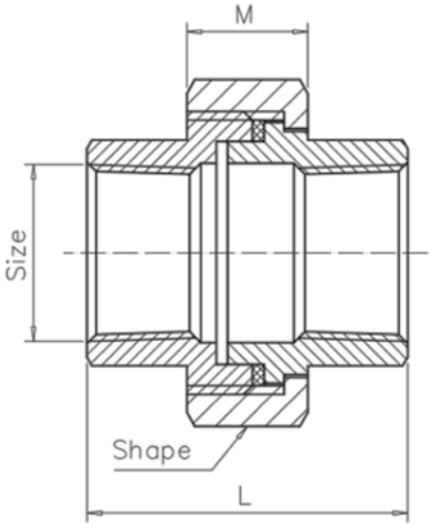

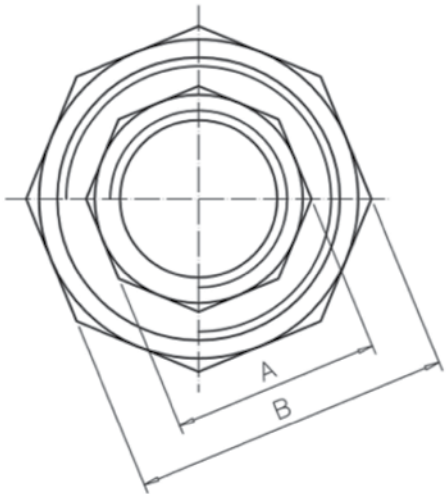

SIZE	1/8"	1/4"	3/8"	1/2"	3/4"	1"	1-1/4"	1-1/2"	2"	2-1/2"	3"	4"
	mm	mm	mm	mm	mm	mm	mm	mm	mm	mm	mm	mm
A	13	16.5	20	24.5	30	37	46.5	53	65	82	95.5	121.5
B	26	29	34	37	44	52.5	63B	70	84	101.5	118	148.5
L1	30	33.5	36.5	39.5	42.5	50	54	58	65	75	83	110
M	13	13.5	15	16	17	20	22	24	27	29.5	31	34

According to ISO 4144 Fig. 14 U4
Shape: 1/8" - 1/2" Hexagon
3/4" - 2" Octagon
2-1/2"-4" Decagon

קשת 90 ר/ר L316/L304 #3000 Elbow 90 SW 304L/316L #3000
ASME B16.11-2009(REVISION OF ASME B16.11-2005)

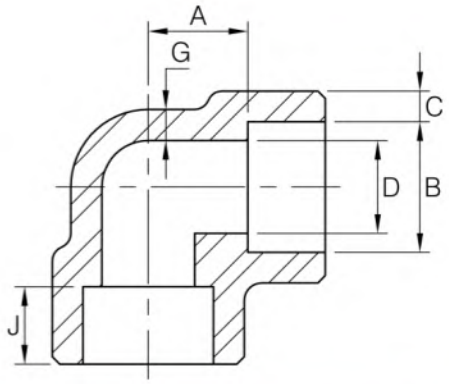

Dimensions in Millimeters.

Socket Welding								
DN	Nom. Pipe Size	B(2)	C(1)		D(2)	A(2)	G	J
			(Avg)	(Min)			(Min)	(Min)
3000Lb								
6	1/8	10.8	3.18	3.18	6.9	11.0	2.41	9.5
8	1/4	14.2	3.78	3.30	9.3	11.0	3.02	9.5
10	3/8	17.6	4.01	3.50	12.6	13.5	3.20	9.5
15	1/2	21.8	4.67	4.09	15.8	15.5	3.73	9.5
20	3/4	27.2	4.90	4.27	21.0	19.0	3.91	12.5
25	1	33.9	5.69	4.98	26.7	22.5	4.55	12.5
32	1-1/4	42.7	6.07	5.28	35.1	27.0	4.85	12.5
40	1-1/2	48.8	6.35	5.54	40.9	32.0	5.08	12.5
50	2	61.2	6.93	6.04	52.5	38.0	5.54	16.0
65	2-1/2	73.9	8.76	7.67	62.7	41.0	7.01	16.0
80	3	89.8	9.52	8.30	78.0	57.0	7.62	16.0
100	4	115.2	10.69	9.35	102.3	66.5	8.56	19.0

קשת 45 ר/ר L304/L316 #3000 lbow 45 SW 304L/316L #3000
ASME B16.11-2009(REVISION OF ASME B16.11-2005)

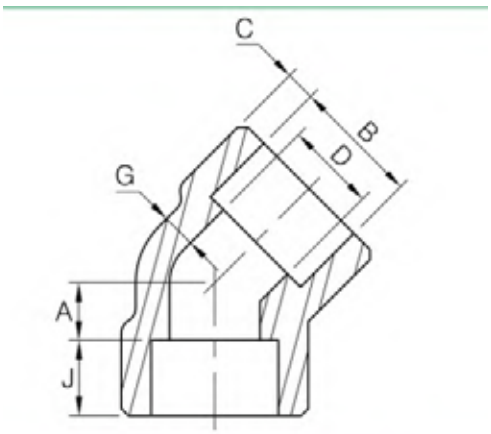

Dimensions in Millimeters.

Socket Welding								
DN	Nom. Pipe Size	B(2)	C(1)		D(2)	A(2)	G	J
			(Avg)	(Min)			(Min)	(Min)
3000Lb								
6	1/8	10.8	3.18	3.18	6.9	8.0	2.41	9.5
8	1/4	14.2	3.78	3.30	9.3	8.0	3.02	9.5
10	3/8	17.6	4.01	3.50	12.6	8.0	3.20	9.5
15	1/2	21.8	4.67	4.09	15.8	11.0	3.73	9.5
20	3/4	27.2	4.90	4.27	21.0	13.0	3.91	12.5
25	1	33.9	5.69	4.98	26.7	14.0	4.55	12.5
32	1-1/4	42.7	6.07	5.28	35.1	17.5	4.85	12.5
40	1-1/2	48.8	6.35	5.54	40.9	20.5	5.08	12.5
50	2	61.2	6.93	6.04	52.5	25.5	5.54	16.0
65	2-1/2	73.9	8.76	7.67	62.7	28.5	7.01	16.0
80	3	89.8	9.52	8.30	78.0	32.0	7.62	16.0
100	4	115.2	10.69	9.35	102.3	41.0	8.56	19.0

טי ר/ר L304/L316 3000# ee SW 316L/304L #3000
ASME B16.11-2009(REVISION OF ASME B16.11-2005)

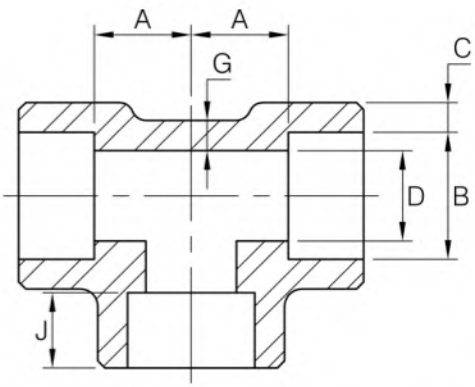

Dimensions in Millimeters.

Socket Welding								
DN	Nom. Pipe Size	B(2)	C(1)		D(2)	A(2)	G	J
			(Avg)	(Min)			(Min)	(Min)
3000Lb								
6	1/8	10.8	3.18	3.18	6.9	11.0	2.41	9.5
8	1/4	14·2	3·78	3·30	9·3	11·0	3·02	9·5
10	3/8	17.6	4.01	3.50	12.6	13.5	3.20	9.5
15	1/2	21.8	4.67	4.09	15.8	15.5	3.73	9.5
20	3/4	27.2	4.90	4.27	21.0	19.0	3.91	12.5
25	1	33.9	5.69	4.98	26.7	22.5	4.55	12.5
32	1-1/4	42.7	6.07	5.28	35.1	27.0	4.85	12.5
40	1-1/2	48.8	6.35	5.54	40.9	32.0	5.08	12.5
50	2	61.2	6.93	6.04	52.5	38.0	5.54	16.0
65	2-1/2	73.9	8.76	7.67	62.7	41.0	7.01	16.0
80	3	89.8	9.52	8.30	78.0	57.0	7.62	16.0
100	4	115.2	10.69	9.35	102.3	66.5	8.56	19.0

מופה ר/ר L304/L316 3000# Full Coupling SW 304L/316L #3000
ASME B16.11-2009(REVISION OF ASME B16.11-2005)

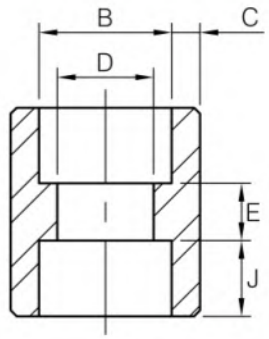

Dimensions in Millimeters.

Socket Welding							
DN	Nom. Pipe Size	B(2)	C(1)		D(2)	E(2)	J
			(Avg)	(Min)			(Min)
3000Lb							
6	1/8	10.8	3.18	3.18	6.9	6.5	9.5
8	1/4	14.2	3.78	3.30	9.3	6.5	9.5
10	3/8	17.6	4.01	3.50	12.6	6.5	9.5
15	1/2	21.8	4.67	4.09	15.8	9.5	9.5
20	3/4	27.2	4.90	4.27	21.0	9.5	12.5
25	1	33.9	5.69	4.98	26.7	12.5	12.5
32	1-1/4	42.7	6.07	5.28	35.1	12.5	12.5
40	1-1/2	48.8	6.35	5.54	40.9	12.5	12.5
50	2	61.2	6.93	6.04	52.5	19.0	16.0
65	2-1/2	73.9	8.76	7.67	62.7	19.0	16.0
80	3	89.8	9.52	8.30	78.0	19.0	16.0
100	4	115.2	10.69	9.35	102.3	19.0	19.0

חצי מופה ר/ר L304/L316 #3000 Half Coupling SW 304L/316L #3000
ASME B16.11-2009(REVISION OF ASME B16.11-2005)

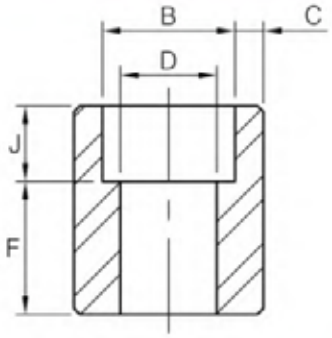

Dimensions in Millimeters.

Socket Welding							
DN	Nom. Pipe Size	B(2)	C(1)		D(2)	F(2)	J
			(Avg)	(Min)			(Min)
3000Lb							
6	1/8	10.8	3.18	3.18	6.9	16.0	9.5
8	1/4	14.2	3.78	3.30	9.3	16.0	9.5
10	3/8	17.6	4.01	3.50	12.6	17.5	9.5
15	1/2	21.8	4.67	4.09	15.8	22.5	9.5
20	3/4	27.2	4.90	4.27	21.0	24.0	12.5
25	1	33.9	5.69	4.98	26.7	28.5	12.5
32	1-1/4	42.7	6.07	5.28	35.1	30.0	12.5
40	1-1/2	48.8	6.35	5.54	40.9	32.0	12.5
50	2	61.2	6.93	6.04	52.5	41.0	16.0
65	2-1/2	73.9	8.76	7.67	62.7	43.0	16.0
80	3	89.8	9.52	8.30	78.0	44.5	16.0
100	4	115.2	10.69	9.35	102.3	48.0	19.0

כיפה ר/ר 3000# L304/L316 3000# Cap SW 304L/316L
ASME B16.11-2009(REVISION OF ASME B16.11-2005)

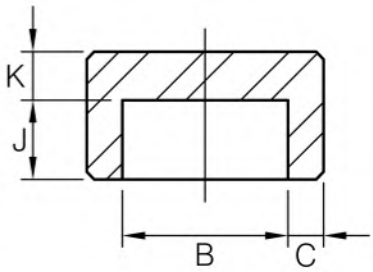

Dimensions in Millimeters.

Socket Welding						
DN	Nom. Pipe Size	B(2)	C(1)		K	J
			(Avg)	(Min)	(Min)	(Min)
3000Lb						
6	1/8	10.8	3.18	3.18	4.8	9.5
8	1/4	14.2	3.78	3.30	4.8	9.5
10	3/8	17.6	4.01	3.50	4.8	9.5
15	1/2	21.8	4.67	4.09	6.4	9.5
20	3/4	27.2	4.90	4.27	6.4	12.5
25	1	33.9	5.69	4.98	9.6	12.5
32	1-1/4	42.7	6.07	5.28	9.6	12.5
40	1-1/2	48.8	6.35	5.54	11.2	12.5
50	2	61.2	6.93	6.04	12.7	16.0
65	2-1/2	73.9	8.76	7.67	15.7	16.0
80	3	89.8	9.52	8.30	19.0	16.0
100	4	115.2	10.69	9.35	22.4	19.0

אינסרט מעבר SW L304/L316 3000# Reducer Insert SW 304L/316L #3000
ASME B16.11-2009(REVISION OF ASME B16.11-2005)

Dimensions in Millimeters.

Nom. Pipe Size	Type(2)		Socket		Shank Dia.	Laying Length A		Bore D		Wall (Min) C		Length SL		Length RL (Min)	
	3M	6M	Dia. B	Depth (Min) K	SD	3M	6M	3M	6M	3M	6M	3M	6M	3M	6M
3/8 X1/4	1	1	14.35	10	17.15	19	21	9.0	6.5	3.78	4.60	14	16	–	–
1/2 X3/8	1	1	17.78	10	21.34	21	23	12.5	9.0	4.01	5.03	16	16	–	–
1/2 X1/4	1	1	14.35	10	21.34	21	21	9.0	6.5	3.78	4.60	16	16	–	–
3/4 X1/2	1	1	21.97	10	26.67	22	25	16.0	12.0	4.67	5.97	17	19	–	–
3/4 X3/8	2	1	17.78	10	26.67	16	22	12.5	9.0	4.01	5.03	–	19	27	–
3/4 X1/4	2	2	14.35	10	26.67	18	22	9.0	6.5	3.78	4.60	–	–	27	32
1 X3/4	1	1	27.31	13	33.40	24	28	21.0	15.5	4.90	6.96	19	21	–	–
1 X1/2	2	1	21.97	10	33.40	16	28	16.0	12.0	4.67	5.97	–	21	28	–
1 X3/8	2	2	17.78	10	33.40	18	22	12.5	9.0	4.01	5.03	–	–	28	33
1 X1/4	2	2	14.35	10	33.40	19	24	9.0	6.5	3.78	4.60	–	–	28	33
1-1/4 X1	1	1	34.04	13	42.16	25	30	26.5	20.5	5.69	7.92	21	22	–	–
1-1/4 X3/4	2	2	27.31	13	42.16	18	21	21.0	15.5	4.90	6.96	–	–	32	35
1-1/4 X1/2	2	2	21.97	10	42.16	19	22	16.0	12.0	4.67	5.97	–	–	32	35
1-1/4 X3/8	2	2	17.78	10	42.16	21	24	12.5	9.0	4.01	5.03	–	–	32	35
1-1/4 X1/4	2	2	14.35	10	42.16	22	25	9.0	6.5	3.78	4.60	–	–	32	35
1-1/2 X1-1/4	1	1	42.80	13	48.26	28	35	35.0	29.5	6.07	7.92	22	25	–	–
1-1/2 X1	2	1	34.04	13	48.26	18	29	26.5	20.5	5.69	7.92	–	25	33	–
1-1/2 X3/4	2	2	27.31	13	48.26	19	25	21.0	15.5	4.90	6.96	–	–	33	40
1-1/2 X1/2	2	2	21.97	10	48.26	21	27	16.0	12.0	4.67	5.97	–	–	33	40
1-1/2 X3/8	2	2	17.78	10	48.26	22	28	12.5	9.0	4.01	5.03	–	–	33	40
2 X1-1/2	1	1	48.90	13	60.33	32	39	41.0	34.0	6.35	8.92	25	28	–	–
2 X1-1/4	2	2	42.80	13	60.33	21	24	35.0	29.5	6.07	7.92	–	–	38	41
2 X1	2	2	34.04	13	60.33	22	25	26.5	21.0	5.69	7.92	–	–	38	41
2 X3/4	2	2	27.31	13	60.33	24	27	21.0	15.5	4.90	6.96	–	–	38	41
2 X1/2	2	2	21.97	10	60.33	25	28	16.0	12.0	4.67	5.97	–	–	38	41

(1) At the option of the manufacturer Type 2 Reducers may be furnished in Type 1 configuration.
(2) 3M & 6M symbols denote 3000 and 6000 classes.

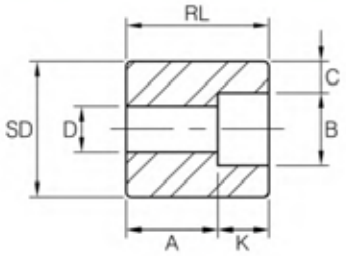

TYPE 2 (1)

(Continued)

Dimensions in Millimeters.

Nom. Pipe Size	Type(2)		Socket		Shank Dia.	Laying Length A		Bore D		Wall (Min) C		Length SL		Length RL (Min)	
	3M	6M	Dia. B	Depth (Min) K	SD	3M	6M	3M	6M	3M	6M	3M	6M	3M	6M
2-1/2 X2	1	1	61.37	16	73.02	46	43	52.5	43.0	6.93	10.92	32	38	–	–
2-1/2 X1-1/2	2	2	48.90	13	73.02	35	35	41.0	34.0	6.35	8.92	–	–	54	54
2-1/2 X1-1/4	2	2	42.80	13	73.02	37	37	35.0	29.5	6.07	7.92	–	–	54	54
2-1/2 X1	2	2	34.04	13	73.02	38	38	26.5	20.5	5.69	7.92	–	–	54	54
2-1/2 X3/4	2	2	27.31	13	73.02	40	38	21.0	15.5	4.90	6.96	–	–	54	54
3 X2-1/2	1	1	74.07	16	88.90	38	57	62.5	54.0	8.76	11.91	32	44	–	–
3 X2	2	2	61.37	16	88.90	25	32	52.5	43.0	6.93	10.92	–	–	48	54
3 X1-1/2	2	2	48.90	13	88.90	28	32	41.0	34.0	6.35	8.92	–	–	48	54
3 X1-1/4	2	2	42.80	13	88.90	30	32	35.0	29.5	6.07	7.92	–	–	48	54
3 X1	2	2	34.04	13	88.90	32	32	26.5	20.5	5.69	7.92	–	–	48	54
4 X3	2	–	90.04	16	114.30	33	–	78.0	–	9.5	–	–	–	60	–
4 X2-1/2	2	–	74.07	16	114.30	38	–	62.5	–	8.76	–	–	–	60	–
4 X2	2	–	61.37	16	114.30	38	–	52.5	–	6.93	–	–	–	60	–
4 X1-1/2	2	–	48.90	13	114.30	42	–	41.0	–	6.35	–	–	–	60	–
4 X1-1/4	2	–	42.80	13	114.30	43	–	35.0	–	6.07	–	–	–	60	–

(1) At the option of the manufacturer Type 2 Reducers may be furnished in Type 1 configuration.
(2) 3M & 6M symbols denote 3000 and 6000 classes.

DIMENSIONAL TOLERANCES OF REDUCER INSERT

MSS SP-79-2004

Unit : m/m

	1/4	3/8	1/2	3/4	1	1-1/4	1-1/2	2	2-1/2	3	4
Laying Length (A)		+1.5 −0			+2.0 −0				+2.5 −0		
Socket Dia (B)	±0.25								+0.4 −0.25		
Bore (D)	±0.8								±1.5		
Shank Dia (SD)		±0.25						±0.50			±0.75
Shank Lengh (SL)		+0 −1.5			+0 −2.0				+0 −0.25		

316L BSP 150# מחברי קמלוק CAM-LOCK #150 BSP

Type A - Adaptor Female Thread

SIZE	1/2"	3/4"	1"	1-1/4"	1-1/2"	2"	2-1/2"	3"	4"	6"
Size of thread	1/2"	3/4"	1"	1-1/4"	1-1/2"	2"	2-1/2"	3"	4"	6"
B: Overall Length	40.9	39	4835	52.5	54.7	63.5	68	70	74.6	79.2
	40.9	39	4835	52.5	54.7	63.5	68	70	74.6	79.2
A: Min I. D.	14.3	21	23.8	30.8	38.5	46	58	73.2	98.2	150
C: Max Across Comers of Adapteors	28.8	39.2	43.8	51.9	60.4	70.4	82.3	97.8	126.8	187.6

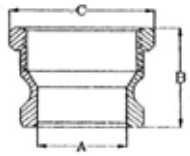

Type B - Coupler Male Thread

SIZE	1/2"	3/4"	1"	1-1/4"	1-1/2"	2"	2-1/2"	3"	4"	6"
Size of thread	1/2"	3/4"	1"	1-1/4"	1-1/2"	2"	2-1/2"	3"	4"	6"
G: Max O.D.	45.7	53.3	60.9	82.6	90.3	99.8	112.4	137.6	165.6	238.3
B: Overall Length	47.3	51	58	65.57	65.7	75.4	83.3	86.5	90.3	105.4
E: Exposed Length	31.4	32	39	44.5	45	50	54.3	55.5	55.5	65.5
A: Min I.D	15	19	25	32.6	39	50.8	63	76.2	100.8	153

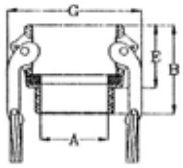

Type C - Coupler Hose Shank

SIZE	1/2"	3/4"	1"	1-1/4"	1-1/2"	2"	2-1/2"	3"	4"	6"
Size of thread	1/2"	3/4"	1"	1-1/4"	1-1/2"	2"	2-1/2"	3"	4"	6"
G: Max O.D.	45.7	53.3	60.9	82.6	90.3	99.8	112.4	137.6	165.6	238.3
B: Overall Length	87	82.8	96.2	102.5	104	120.57	142.3	159.12	165.5	227.87
E: Exposed Length	31.4	32	39	44.5	45	50	54.3	55.5	55.5	65.5
A: Min I.D	7.7	13.8	19.8	25.9	32.3	44.5	56.7	68	93.4	144.8
D: Shank O.D.	14.6	21	27	33.7	40.1	52.7	66.3	79	104.4	156.8

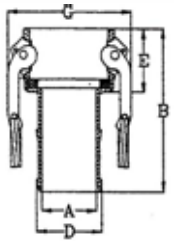

Type D - Coupler Female Thread

SIZE	1/2"	3/4"	1"	1-1/4"	1-1/2"	2"	2-1/2"	3"	4"	6"
Size of thread	1/2"	3/4"	1"	1-1/4"	1-1/2"	2"	2-1/2"	3"	4"	6"
G: Max O.D.	45.7	53.3	60.9	82.6	90.3	99.8	112.4	137.6	165.6	238.3
B: Overall Length	49.5	51	58.64	67.5	67	72.2	85.64	86.5	88.8	103.5
E: Exposed Length	31.4	32	39	44.5	45	50	54.3	55.5	55.5	65.5
A: Min I.D	18	21	25	34.9	39	50.8	63	76.2	100.8	152.6

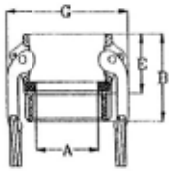

L 316

Type E - Adaptor Hose Shank

SIZE	1/2"	3/4"	1"	1-1/4"	1-1/2"	2"	2-1/2"	3"	4"	6"
Size of thread	1/2"	3/4"	1"	1-1/4"	1-1/2"	2"	2-1/2"	3"	4"	6"
C: Max O.D.	30.3	35	38	48	55.4	65.3	79.5	93.5	121.5	179
B: Overall Length	86.5	86.3	107.47	109.5	113	129.58	149.5	166.6	175.5	238.5
E: Exposed Length	42	35.5	48.6	51.5	54	59.5	61.5	65	66.5	75
A: Min I.D	7.8	13.8	19.8	25.9	32.3	44.5	56.7	68	934	144.8
D: Shank O.D.	14.6	21	27	33.7	40.1	52.7	66.3	79	104.4	156.8

Type F - Adaptor Male Thread

SIZE	1/2"	3/4"	1"	1-1/4"	1-1/2"	2"	2-1/2"	3"	4"	6"
Size of thread	1/2"	3/4"	1"	1-1/4"	1-1/2"	2"	2-1/2"	3"	4"	6"
B: Overall Length	49	58	67.5	73.2	74.7	83.62	97	101	107.9	116.3
E: Exposed Length	34	39	48.5	52.5	54	61.7	68	70	74.6	79.2
A: Min I.D	14.2	21	23.8	30.8	38.5	46	58	73.2	98.2	150
C: Max O.D.	28.6	39.2	43.8	51.9	60.4	70.4	85.3	97.8	126.8	187.6

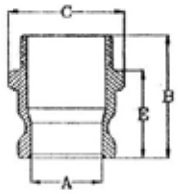

Type DC - Dust Cup

SIZE	1/2"	3/4"	1"	1-1/4"	1-1/2"	2"	2-1/2"	3"	4"	6"
Size of thread	1/2"	3/4"	1"	1-1/4"	1-1/2"	2"	2-1/2"	3"	4"	6"
G: Max O.D.	45.7	53.3	60.9	82.6	90.3	99.8	112.4	137.6	165.6	238.3
B: Overall Length	43.2	46	53	55.2	59.4	65.2	69.8	71.5	72	85.77
E: Exposed Length	33.6	34	41	46.5	47.7	53.2	57.8	59.5	60	70.5

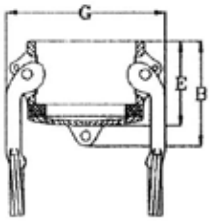

Type DP - Dust Plug

SIZE	1/2"	3/4"	1"	1-1/4"	1-1/2"	2"	2-1/2"	3"	4"	6"
Size of thread	1/2"	3/4"	1"	1-1/4"	1-1/2"	2"	2-1/2"	3"	4"	6"
B: Overall Length	37.36	40.5	48.5	51.2	56.6	63.4	65	67	68.8	80.53
E: Exposed Length	27.6	27.5	36.5	42	44	50.8	53	55	52.6	65.5

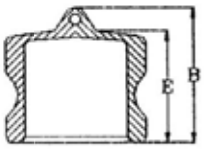

קשת ארוכה°90 לריתוך סקדיול 10/40 304/316

Long Elbow 90 W/W SCH10/40 304/316

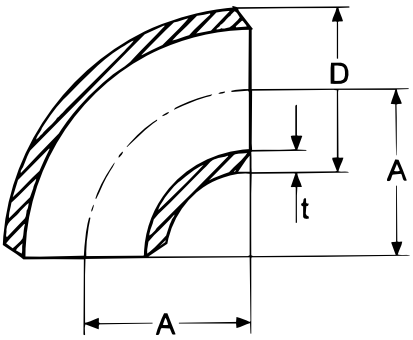

Dimensions in mm

Diameter	SCHEDULE	D	t
1/2"	10s	21.3	2.11
	40s	21.3	2.77
3/4"	10s	26.7	2.11
	40s	26.7	2.87
1 "	10s	33.4	2.77
	40s	33.4	3.38
11/4 "	10s	42.2	2.77
	40s	42.2	3.56
11/2 "	10s	48.3	2.77
	40s	48.3	3.68
2 "	10s	60.3	2.77
	40s	60.3	3.91
21/2"	10s	73.0	3.05
	40s	73.0	5.16
3 "	10s	88.9	3.05
	40s	88.9	5.49
4"	10s	114.3	3.05
	40s	114.3	6.02
6 "	10s	168.3	3.40
	40s	1683	7.11
8"	10s	219.1	3.76
	40s	219.1	8.18
	40s	273.1	9.27
"12	10/10S	323.9	4.57
	40	323.9	10.31
	40Sa	323.3	9.53
"14	10	355.6	6.35
	10S	355.6	4.78
	40	355.6	11.13
	40S	355.6	9.53
"16	10	406.4	6.35
	10S	406.4	4.78
	40	406.4	12.7
	40S	406.4	9.53
"18	10	457.2	6.35
	10S	457.2	4.78
	40	457.2	14.27
	40S	457.2	9.53
"20	10	508	6.35
	10S	508	5.54
	40	508	15.09
	40S	508	9.53
"24	10	609.6	6.35
	10S	609.6	6.35
	40	609.6	17.48
	40S	609.6	9.53

* ניתן להזמין עם ובלי תפר
* קיים מלאי זמין למידות 10SCH, S10SCH, 40SCH, S40SCH.
* ניתן להזמין מידות שונות לפי דרישה.

קשת ארוכה 45° לריתוך סקדיול 10/40 304/316

Long Elbow 45 W/W SCH10/40 304/316

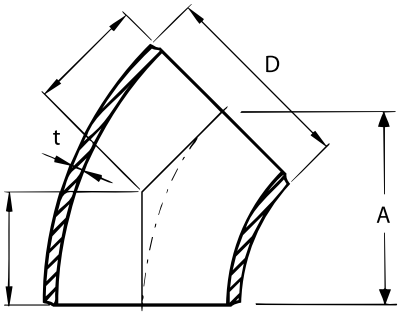

Dimensions in mm

Diameter	SCHEDULE	D	t
1/2"	10s	21.3	2.11
	40s	21.3	2.77
3/4"	10s	26.7	2.11
	40s	26.7	2.87
1 "	10s	33.4	2.77
	40s	33.4	3.38
11/4 "	10s	42.2	2.77
	40s	42.2	3.56
11/2 "	10s	48.3	2.77
	40s	48.3	3.68
2 "	10s	60.3	2.77
	40s	60.3	3.91
21/2"	10s	73.0	3.05
	40s	73.0	5.16
3 "	10s	88.9	3.05
	40s	88.9	5.49
	40s	101.6	5.74
4"	10s	114.3	3.05
	40s	114.3	6.02
	40s	141.3	6.55
6 "	10s	168.3	3.40
	40s	1683	7.11
8"	10s	219.1	3.76
	40s	219.1	8.18
10"	10s	273.1	4.19
	40s	273.1	9.27
"12	10/10S	323.9	4.57
	40	323.9	10.31
	40Sa	323.3	9.53
"14	10	355.6	6.35
	10S	355.6	4.78
	40	355.6	11.13
	40S	355.6	9.53
"16	10	406.4	6.35
	10S	406.4	4.78
	40	406.4	12.7
	40S	406.4	9.53
"18	10	457.2	6.35
	10S	457.2	4.78
	40	457.2	14.27
	40S	457.2	9.53
"20	10	508	6.35
	10S	508	5.54
	40	508	15.09
	40S	508	9.53
"24	10	609.6	6.35
	10S	609.6	6.35
	40	609.6	17.48
	40S	609.6	9.53

* ניתן להזמין עם ובלי תפר
* קיים מלאי זמין למידות 10SCH, S10SCH, 40SCH, S40SCH.
* ניתן להזמין מידות שונות לפי דרישה.

טי סימטרי לריתוך סדקיול 10/40 304/316

Equal Tee W/W SCH10/40 304/316

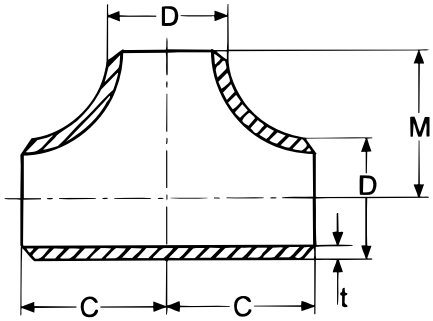

Dimensions in mm

Diameter	SCHEDULE	D	t
1/2"	10s	21.3	2.11
	40s	21.3	2.77
3/4"	10s	26.7	2.11
	40s	26.7	2.87
1 "	10s	33.4	2.77
	40s	33.4	3.38
11/4 "	10s	42.2	2.77
	40s	42.2	3.56
11/2 "	10s	48.3	2.77
	40s	48.3	3.68
2 "	10s	60.3	2.77
	40s	60.3	3.91
21/2"	10s	73.0	3.05
	40s	73.0	5.16
3 "	10s	88.9	3.05
	40s	88.9	5.49
4"	10s	114.3	3.05
	40s	114.3	6.02
6 "	10s	168.3	3.40
	40s	1683	7.11
8"	10s	219.1	3.76
	40s	219.1	8.18
10"	10s	273.1	4.19
	40s	273.1	9.27
"12	10/10S	323.9	4.57
	40	323.9	10.31
	40Sa	323.3	9.53
"14	10	355.6	6.35
	10S	355.6	4.78
	40	355.6	11.13
	40S	355.6	9.53
"16	10	406.4	6.35
	10S	406.4	4.78
	40	406.4	12.7
	40S	406.4	9.53
"18	10	457.2	6.35
	10S	457.2	4.78
	40	457.2	14.27
	40S	457.2	9.53
"20	10	508	6.35
	10S	508	5.54
	40	508	15.09
	40S	508	9.53
"24	10	609.6	6.35
	10S	609.6	6.35
	40	609.6	17.48
	40S	609.6	9.53

* ניתן להזמין עם ובלי תפר
* קיים מלאי זמין למידות 10SCH, S10SCH, 40SCH, S40SCH.
* ניתן להזמין מידות שונות לפי דרישה.
* קיים מלאי זמין עבור SCH

מעבר קונסנטרי סקדיול 10/40 304/316

Concentric Reducer SCH10/40 304/316

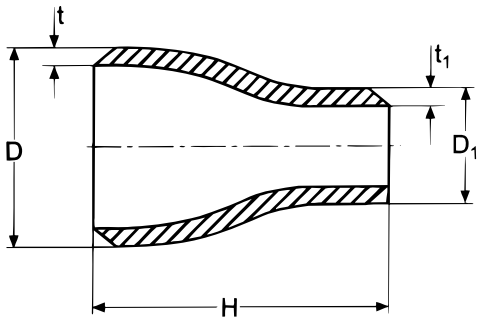

Dimensions in mm

Dimensions in mm						
Diameter	Schedule	D	D1	t	t1	H
3/4x1/2"	10s	26.7	21.3	2.11	2.11	39.3
1x1/2"	10s	33.4	21.3	2.77	2.11	50.8
1x3/4"	10s	33.4	26.7	2.77	2.11	50.8
11/4"x1/2"	10s	42.2	21.3	2.77	2.11	50.8
11/4x3/4	10s	42.2	26.7	2.77	2.11	50.8
11/4x1"	10s	42.2	33.4	2.77	2.77	50.8
11/2x1/2"	10s	48.3	21.3	2.77	2.11	63.5
11/2x3/4"	10s	48.3	26.7	2.77	2.11	63.5
11/2x1"	10s	48.3	33.4	2.77	2.77	63.5
11/2x11/4"	10s	48.3	42.2	2.77	2.77	63.5
2 x1/2"	10s	60.3	21.3	5.54	3.73	76.2
2 x3/4"	10s	60.3	26.7	2.77	2.11	76.2
2 x 1"	10s	60.3	33.4	2.77	2.77	76.2
2x11/4"	10s	60.3	42.2	2.77	2.77	76.2
2x11/2"	10s	60.3	48.3	2.77	2.77	76.2
21/2x1"	10s	60.3	33.4	3.05	2.77	88.9
21/2x11/2"	10s	73.0	48.3	3.05	2.77	88.9
21/2x2	10s	73.0	60.3	3.05	2.77	88.9
3x1"	10s	88.9	33.4	3.05	2.77	88.9
3x11/4"	10s	88.9	42.2	5.49	3.56	88.9
3x11/2"	10s	88.9	48.3	3.05	2.77	88.9
3x2"	10s	88.9	60.3	3.05	2.77	88.9
3x21/2"	10s	88.9	73.0	3.05	3.05	88.9
4x11/2"	10s	114.3	60.3	3.05	5.08	101.6
4 x 2"	10s	141.3	73.0	3.05	2.77	101.6
4x21/2"	10s	141.3	3.05	3.05	2.77	101.6
4 x 3"	10s	114.3	88.9	3.05	3.05	101.6
5x21/2"	10s	141.3	73.0	3.40	3.05	127.0
5 x 3"	10s	141.3	88.9	3.40	3.05	127.0
5 x 4"	10s	141.3 1	14.3	3.40	3.05	127.0
6 x 3"	10s	168.3	88.9	3.40	3.05	139.7
6 x 4"	10s	168.3 1	14.3	3.40	3.05	139.7
6 x 5"	10s	168.3 1	41.4	3.40	3.40	139.7

* ניתן להזמין עם ובלי תפר
* קיים מלאי זמין למידות 10SCH, S10SCH, 40SCH, S40SCH.
* ניתן להזמין מידות שונות לפי דרישה.

מעבר אקצנטרי סקדיול 10/40 304/316
Eccentric Reducer W/W SCH10/40 304/316

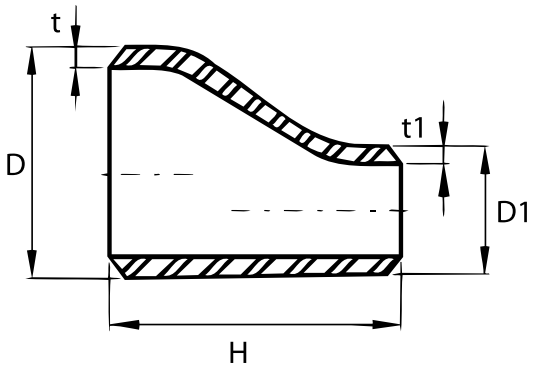

Dimensions in mm

Diameter	SCHEDULE	D	D1	t	t1	H
3/4x1/2"	10s	26.7	21.3	2.11	2.11	39.3
1x1/2"	10s	33.4	21.3	2.77	2.11	50.8
1x3/4"	10s	33.4	26.7	2.77	2.11	50.8
11/4"x1/2"	10s	42.2	21.3	2.77	2.11	50.8
11/4x3/4	10s	42.2	26.7	2.77	2.11	50.8
11/4x1"	10s	42.2	33.4	2.77	2.77	50.8
11/2x1/2"	10s	48.3	21.3	2.77	2.11	63.5
11/2x3/4"	10s	48.3	26.7	2.77	2.11	63.5
11/2x1"	10s	48.3	33.4	2.77	2.77	63.5
11/2x11/4"	10s	48.3	42.2	2.77	2.77	63.5
2 x1/2"	10s	60.3	21.3	5.54	3.73	76.2
2 x3/4"	10s	60.3	26.7	2.77	2.11	76.2
2 x 1"	10s	60.3	33.4	2.77	2.77	76.2
2x11/4"	10s	60.3	42.2	2.77	2.77	76.2
2x11/2"	10s	60.3	48.3	2.77	2.77	76.2
21/2x1"	10s	60.3	33.4	3.05	2.77	88.9
21/2x11/2"	10s	73.0	48.3	3.05	2.77	88.9
21/2x2	10s	73.0	60.3	3.05	2.77	88.9
3x1"	10s	88.9	33.4	3.05	2.77	88.9
3x11/4"	10s	88.9	42.2	5.49	3.56	88.9
3x11/2"	10s	88.9	48.3	3.05	2.77	88.9
3x2"	10s	88.9	60.3	3.05	2.77	88.9
3x21/2"	10s	88.9	73.0	3.05	3.05	88.9
4x11/2"	10s	114.3	60.3	3.05	5.08	101.6
4 x 2"	10s	141.3	73.0	3.05	2.77	101.6
4x21/2"	10s	141.3	3.05	3.05	2.77	101.6
4 x 3"	10s	114.3	88.9	3.05	3.05	101.6
5x21/2"	10s	141.3	73.0	3.40	3.05	127.0
5 x 3"	10s	141.3	88.9	3.40	3.05	127.0
5 x 4"	10s	141.3	114.3	3.40	3.05	127.0
6 x 3"	10s	168.3	88.9	3.40	3.05	139.7
6 x 4"	10s	168.3	114.3	3.40	3.05	139.7
6 x 5"	10s	168.3	141.4	3.40	3.40	139.7

* המוצרים קיימים בסקדיול 40

* ניתן להזמין עם ובלי תפר
* קיים מלאי זמין למידות 10SCH, S10SCH, 40SCH, S40SCH.
* ניתן להזמין מידות שונות לפי דרישה.

כיפה לריתוך לצינור סקדיול10/40 304/316

Cap W/W SCH10/40 304/316

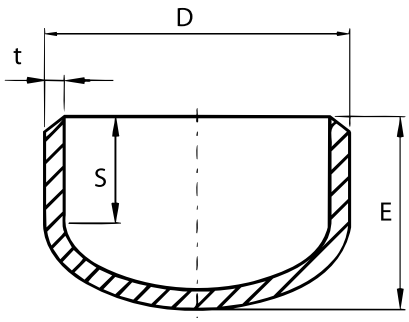

Dimensions in mm

Diameter	SCHEDULE	D	t
1/2"	10s	21 3	2 11
	40s	21 3	2 77
3/4"	10s	26 7	2 11
	40s	26 7	2 87
1 "	10s	33 4	2 77
	40s	33 4	3 38
11/4 "	10s	42 2	2 77
	40s	42 2	3 56
11/2 "	10s	48.3	2.77
	40s	48.3	3.68
2 "	10s	60.3	2.77
	40s	60.3	3.91
21/2"	10s	73.0	3.05
	40s	73.0	5.16
3 "	10s	88.9	3.05
	40s	88.9	5.49
4"	10s	114.3	3.05
	40s	114.3	6.02
	80s	114.3	8.56
	80s	141.3	9.53
6 "	10s	168.3	3.40
	40s	1683	7.11
8"	10s	219.1	3.76
	40s	219.1	8.18
10"	10s	273.1	4.19
	40s	273.1	9.27
"12	10/10S	323.9	4.57
	40	323.9	10.31
	40Sa	323.3	9.53
"14	10	355.6	6.35
	10S	355.6	4.78
	40	355.6	11.13
	40S	355.6	9.53
"16	10	406.4	6.35
	10S	406.4	4.78
	40	406.4	12.7
	40S	406.4	9.53
"18	10	457.2	6.35
	10S	457.2	4.78
	40	457.2	14.27
	40S	457.2	9.53
"20	10	508	6.35
	10S	508	5.54
	40	508	15.09
	40S	508	9.53
"24	10	609.6	6.35
	10S	609.6	6.35
	40	609.6	17.48
	40S	609.6	9.53

* ניתן להזמין עם ובלי תפר
* קיים מלאי זמין למידות 10SCH, S10SCH, 40SCH, S40SCH.
* ניתן להזמין מידות שונות לפי דרישה.

ברז כדורי 3PC מעבר מלא 316 לריתוך SW עם הכנה למפעיל

3PC BALL VALVE 316 SOCKET WELD END

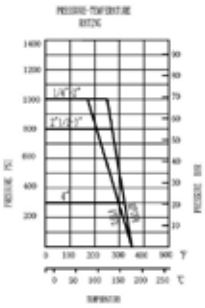

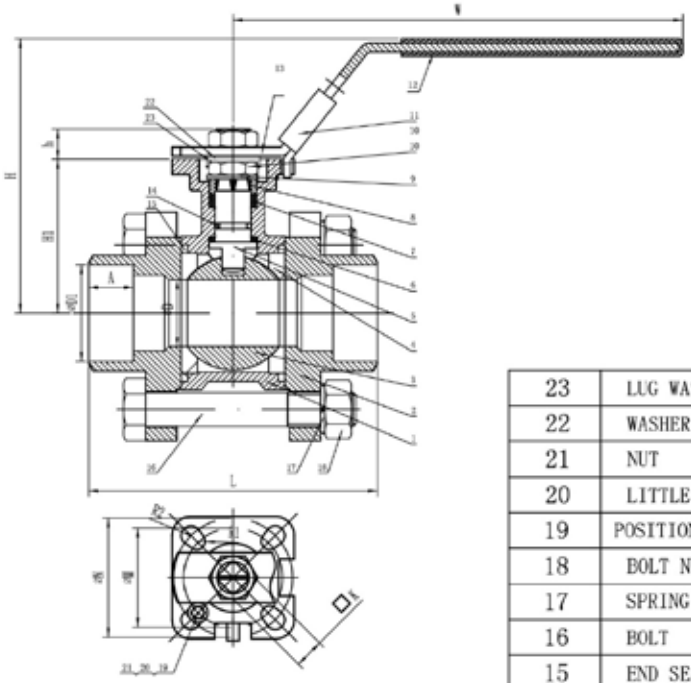

23	LUG WASHER	304	1
22	WASHER	304	1
21	NUT	304	1
20	LITTLE WASHER	304	1
19	POSITIONING BOLT	304	1
18	BOLT NUT	304	4-6
17	SPRING WASHER	304	4-6
16	BOLT	304	4-6
15	END SEAL	PTFE	2
14	O-RING	NBR/VITON	1
13	HANDLE	304	1
12	PLASTIC COVER	PLASTIC	1
11	LOCK DEVICE	304	1
10	STEM NUT	304	2
9	BELLEVILLE WASHER	304	2
8	BUSHING	304	1
7	STEM PACKING	PTFE	1
6	THRUST WASHER	PTFE	1
5	STEM	304/316	1
4	BALL SEAT	PTFE/RPTFE	2
3	BALL	304/316	1
2	CAP	CF8/CF8M	2
1	BODY	CF8/CF8M	1

SIZE / ITEM	D	L	H	W	H1	h	D1	A	M	N	R1	R2	K
4"	96	226	172	330	128	18.5	115.4	19	70	102	4.5	5.5	17
3"	76	186	160	233	114	18.5	89.9	16	70	102	4.5	5.5	17
2-1/2"	64	170	151	233	105	18.5	77/74	20	70	102	4.5	5.5	17
2"	50	124.5	124	188	85	15	61.1	21	50	70	3.5	4.5	14
1-1/2"	38	108.6	109	188	70	15	48.8	19	50	70	3.5	4.5	14
1-1/4"	32	97	98	162	60	11	42.8	18	42	50	3	3.5	11
1"	25	82	93	162	55	11	34.2	18	42	50	3	3.5	11
3/4"	20	70.6	81	141	48	9	27.4	14	36	42	3	3	9
1/2"	15	66	75	141	42	9	21.9	11	36	42	3	3	9
3/8"	12.5	64	75	141	42	9	17.6	11	36	42	3	3	9
1/4"	11.5	64	75	141	42	9	14.1	11	36	42	3	3	9

ברז כדורי מעבר מלא בין אוגנים 2PC 316L עם הכנה למפעיל

2 PC FLANGED END BALL VALVE

WITH M. PAD

FEATURES

- Full port, 1/2"~10" (DN15~DN250)
- W. P.: CLASS 150/300
- W. T.:-20°C ~200°C (-4°F~392°F)
- Investment casting
- Blow-out proof stem
- Anti-static device (option)
- Locking device
- ISO 5211 Mounting pad
- TA-Luft approved
- Flange dimension : ASME B16.5
- Face to face: ASME B16.10

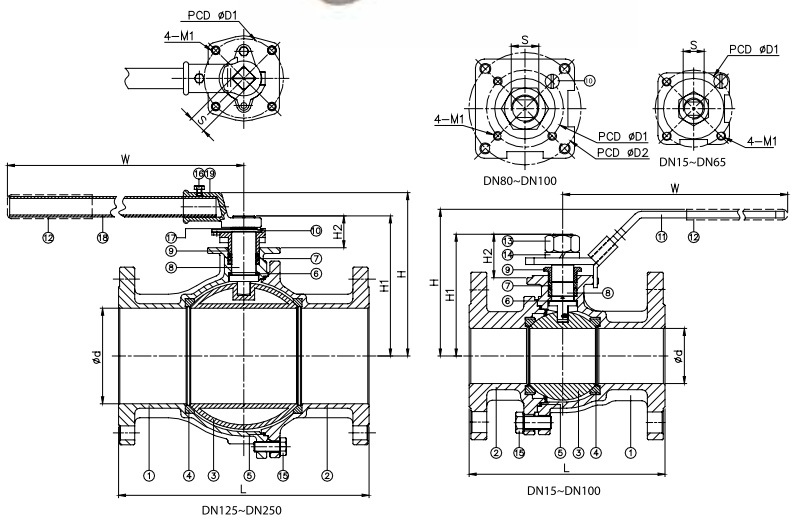

ITEM	PARTS	MATERIAL	
1	BODY	ASTM A351-CF8M	ASTM A216-WCB
2	CAP		
3	SOLID BALL	ASTM A351-CF8M	
		ASTM A240-316	
4	ASTM A240-316	PTFE / RTFE	
5	SEAT	PTFE	
6	SEAL		
7	THRUST WASHER		
8	PACKING	ASTM A276-316	
9	STEM	AISI 304	
10	GLAND		
11	STOP PIN	STAINLESS STEEL	
12	HANDLE SLEEVE	PVC	
13	STEM NUT	AISI 304	
14	SPRING WASHER		
15	BOLT		
16	BOLT		
17	CIRCLIPS FOR SHAFT		
18	STEEL TUBE		
19	WRENCH BLOCK		

DN	d	H	H1	H2	W	S	D1	D2	M1	CLASS 150		CLASS 300	
										L	Torque (N-M)	L	Torque (N-M)
15	15	85.7	57.2	23.7	169	8	42	-	M5	108	3.8	140	7.5
10	12.5	22.5	50.8	58.5	18.5	99.5	5	3/8"~24UNF	4				
20	20	88.5	60	23.5	169	8	42	-	M5	117	5.5	152	7.6
25	25	103.3	73.8	29	205	10	50	-	M6	127	6.5	165	17.5
32	32	108	78.5	29	205	10	50	-	M6	140	9	178	20
40	38	128.4	102.9	39.4	266	12	70	-	M8	165	25	190	22.9
50	50	135.9	110.4	39.4	266	12	70	-	M8	178	38	216	32.2
65	65	147.6	122.1	38.6	298	12	70	-	M8	190	45	241	42.3
80	80	167.5	142	43	390	15	70	102	M10	203	61	282	87.2
100	100	182.5	157	43	390	15	70	102	M10	228.5	80	305	98.2
125	125	239.6	199	52	743	27	125	-	M12	356	160	-	-
150	150	256.5	220	50	743	27	125	-	M12	394	190	403	185
200	200	334	300.5	85.5	840	36	140	-	M16	457	470	502	470
250	250	378	334.5	74.5	1040	36	140	-	M16	533	750	-	-

NPS	d	H	H1	H2	W	S	D1	D2	M1	CLASS 150		CLASS 300	
										L	Torque (in-lb)	L	Torque (in-lb)
1/2"	0.59	3.37	2.25	0.93	6.65	0.31	1.65	-	M5	4.25	33.6	5.51	66.4
3/4"	0.79	3.48	2.36	0.93	6.65	0.31	1.65	-	M5	4.61	48.7	5.98	67.3
1"	0.98	4.07	2.91	1.14	8.07	0.39	1.97	-	M6	5	57.5	6.5	154.9
1-1/4"	1.26	4.25	3.09	1.14	8.07	0.39	1.97	-	M6	5.51	79.7	7.01	177
1-1/2"	1.5	5.06	4.05	1.55	10.47	0.47	2.76	-	M8	6.5	221.3	7.48	202.7
2"	1.97	5.35	4.35	1.55	10.47	0.47	2.76	-	M8	7.01	336.3	8.5	285
2-1/2"	2.56	5.81	4.81	1.52	11.73	0.59	2.76	-	M8	7.48	398.3	9.49	374.4
3"	3.15	6.59	5.59	1.69	15.35	0.59	2.76	4.02	M10	7.99	539.9	11.1	771.8
4"	3.94	7.19	6.18	1.69	15.35	0.59	2.76	4.02	M10	9	708.1	12.01	869.1
5"	4.92	9.43	7.83	2.05	29.25	1.06	4.92	-	M12	14.02	1416.1	-	-
6"	5.91	10.1	8.66	1.97	29.25	1.06	4.92	-	M12	15.51	1681.6	15.87	1637.4
8"	7.87	13.15	11.83	3.37	33.07	1.42	5.51	-	M16	17.99	4159.8	19.76	4159.8
10"	9.84	14.88	13.17	2.93	40.94	1.42	5.51	-	M16	20.98	6638	-	-
250	250	378	334.5	74.5	1040	36	140	-	M16	533	750	-	-

* ניתן לחדש אטמים

316L 2 PC Screwed End Ball Valv With M.Pod

ברז כדור מעבר מלא עם הכנה למפעיל 2PC

FEATURES

- Full port, 1/4"~3" (DN8~DN80)
- W. P.: 1000 WOG(PN63)
- W. T.:-20°C ~200°C (-4°F~392°F)
- Investment casting
- Blow-out proof stem
- Live-loading design
- Anit-static device
- Locking device
- ISO 5211 Direct mounting pad
- ISO 15848 fugitive emission approved (option)
- Automation accessories (option)
- Thread type: ASME B1.20.1 (NPT), DIN 2999 & BS21, ISO7/1 & EN10226

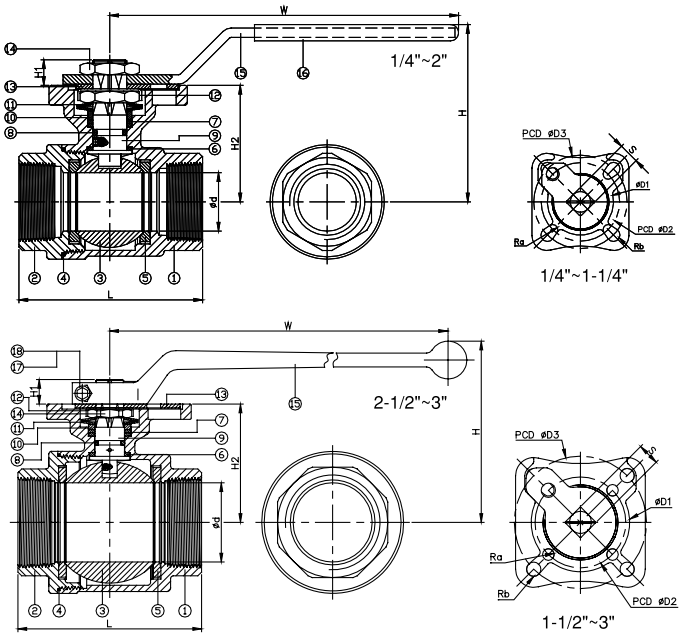

ITEM	PARTS	MATERIAL	
1	BODY	ASTM A351-CF8M	ASTM A216-WCB
2	CAP		
3	BALL	ASTM A351-CF8M	
4	SEAL	PTFE	
5	SEAT	PTFE/RTFE	
6	THRUST WASHER	PTFE	
7	PACKING		
8	O-RING	VITON	
9	STEM	ASTM A276-316	
10	GLAND RING	AISI 304	
11	BELLEVILLE WASHER	AISI 301	
12	LOCKING WASHER	AISI 304	
13	STOPPER		
14	STEM NUT		
15	HANDLE	STAINLESS STEEL	
16	HANDLE SLEEVE	PVC	
17	BOLT	AISI 304	
18	NUT		

DN	d	L	H	H1	H2	W	S	D1	D2	D3	Ra	RB	Torque(N-M)	Weight(kg)
8	11.6	58	62	8	36.4	113.5	9	31	36	42	2.75	2.75	5.5	0.4
10	12.7	58	62	8	36.4	113.5	9	31	36	42	2.75	2.75	5.5	0.4
15	15	58	62	8	36.4	113.5	9	31	36	42	2.75	2.75	5.5	0.4
20	20	65.6	65	9	39.2	113.5	9	31	36	42	2.75	2.75	7.5	0.5
25	25	78.7	76	11	48.7	140	11	35.5	42	50	2.75	3.5	11	0.8
32	32	90	81.5	11	54.2	140	11	35.5	42	50	2.75	3.5	15	1.2
40	38	105	103	11.5	65.7	172	14	56	50	70	3.5	4.5	20	2
50	50	124	111.5	11.5	75.5	172	14	56	50	70	3.5	4.5	40	2.9
65	63	146.2	141	20.5	91.5	310	17	76	70	102	4.5	5.5	60	6
80	76	163.7	150	20.5	100.75	310	17	76	70	102	4.5	5.5	85	7.2

	d	L	H	H1	H2	W	S	D1	D2	D3	Ra	RB	Torque(in-lb)	Weight(lb)
1/4"	0.46	2.28	2.44	0.31	1.43	4.47	0.35	1.22	1.42	1.65	0.11	0.11	48.7	0.9
3/8"	0.5	2.28	2.44	0.31	1.43	4.47	0.35	1.22	1.42	1.65	0.11	0.11	48.7	0.8
1/2"	0.59	2.28	2.44	0.31	1.43	4.47	0.35	1.22	1.42	1.65	0.11	0.11	48.7	0.8
3/4"	0.79	2.58	2.56	0.35	1.54	4.47	0.35	1.22	1.42	1.65	0.11	0.11	66.4	1
1"	0.98	3.1	2.99	0.43	1.92	5.51	0.43	1.4	1.65	1.97	0.11	0.14	97.4	1.8
1-1/4"	1.26	3.54	3.21	0.43	2.13	5.51	0.43	1.4	1.65	1.97	0.11	0.14	132.8	2.7
1-1/2"	1.5	4.13	4.06	0.45	2.59	6.77	0.55	2.2	1.97	2.76	0.14	0.18	177	4.4
2"	1.97	4.88	4.39	0.45	2.97	6.77	0.55	2.2	1.97	2.76	0.14	0.18	354	6.4
2-1/2"	2.48	5.76	5.55	0.81	3.6	12.2	0.67	2.99	2.76	4.02	0.18	0.22	531	13.2
3"	2.99	6.44	5.91	0.81	3.97	12.2	0.67	2.99	2.76	4.02	0.18	0.22	752.3	15.9

ברז כדורי מעבר מלא ללא הכנה למפעיל קיימים במלאי ברזים נקבה/נקבה ונקבה/זכר

2-PC. SCREWED END BALL VALVE F/F, F/M 316

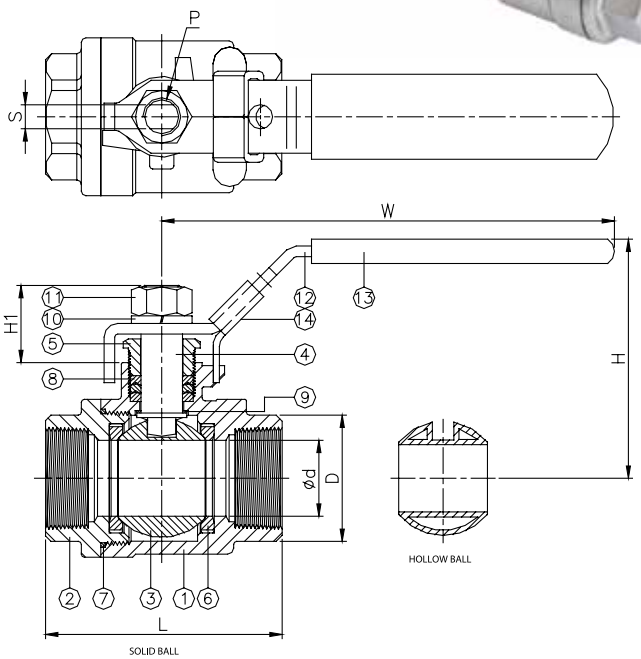

FEATURES

- Full port, 1/4"~3" (DN8~DN80)
- W. P.: 1000 WOG(PN63)
- W. T.:-20°C ~200°C (-4°F~392°F)
- Investment casting
- Blow-out proof stem
- Locking device
- Tapped & drilled mounting pad (option)
- TA-Luft approved (option)
- Length conform to DIN 3202/4-M3-2006SM3(option)
- Thread type: ASME B1.20.1 (NPT), DIN 2999 & BS21 ISO7/1 & EN10226

ITEM	PARTS	MATERIAL	
1	BODY	ASTM A351-CF8M	ASTM A216-WCB
2	CAP		
3	SOLID BALL	ASTM A351-CF8M	
	HOLLOW BALL	ASTM A240-316	
4	STEM	ASTM A276-316	
5	GLAND	AISI 304	
6	SEAT	PTFE/RTFE	
7	SEAL	PTFE	
8	PACKING		
9	THRUST WASHER		
10	SPRING WASHER	AISI 304	
11	NUT		
12	HANDLE	STAINLESS STEEL	
13	HANDLE SLEEVE	PVC	
14	LOCKING DEVICE	STAINLESS STEEL	

DN	d	D	L	H	H1	W	S	P	Torque(N-M)	Weight(kg)	
										SOLID BALL	HOLLOW BALL
8	11.6	19	50.8	58.5	18.5	99.5	5	3/8"~24UNF	3.5	0.2	–
10	12.5	22.5	50.8	58.5	18.5	99.5	5	3/8"~24UNF	4	0.2	–
15	15	26	58	60.5	18.8	99.5	5	3/8"~24UNF	5.5	0.3	–
20	20	32	65.6	63	23.4	123	6.5	7/16"~20UNF	7.5	0.5	–
25	25	38	78.7	79.5	26.15	149	8	7/16"~20UNF	11	0.8	–
32	32	48	90	86	23.6	149	8	7/16"~20UNF	15	1.1	–
40	38	54.8	105	101.7	28.2	190	10	1/2"~20UNF	20	1.8	–
50	50	67	124	109.3	23.4	190	10	1/2"~20UNF	40	2.7	2.3
65	63	85	146	140	39.4	247	12	3/4"~10UNF	60	5.6	4.5
80	76	100	163.2	148.5	39.4	247	12	3/4"~10UNF	85	7.5	6.2

NPS	d	D	L	H	H1	W	S	P	Torque (in-lb)	Weight (lb)	
										SOLID BALL	HOLLOW BALL
1/4"	0.46	0.75	2	2.3	0.73	3.92	0.2	3/8"~24UNF	31	0.5	–
3/8"	0.49	0.89	2	2.3	0.73	3.92	0.2	3/8"~24UNF	35.4	0.5	–
1/2"	0.59	1.02	2.28	2.38	0.74	3.92	0.2	3/8"~24UNF	48.7	0.7	–
3/4"	0.79	1.26	2.28	2.48	0.92	4.84	0.26	7/16"~20UNF	66.4	1	–
1"	0.98	1.5	3.1	3.13	1.03	5.87	0.31	7/16"~20UNF	97.4	1.7	–
1-1/4"	1.26	1.89	3.54	3.39	0.93	5.87	0.31	7/16"~20UNF	132.8	2.5	–
1-1/2"	1.5	2.16	4.13	4	1.11	7.48	0.39	1/2"~20UNF	177	3.9	–
2"	1.97	2.64	4.88	4.3	0.92	7.48	0.39	1/2"~20UNF	354	5.9	5.1
2-1/2"	2.48	3.35	5.75	5.51	1.55	9.72	0.47	3/4"~10UNF	531	12.4	9.9
3"	2.99	3.94	6.43	5.85	1.55	9.72	0.47	3/4"~10UNF	752.3	16.5	13.7

ברז כדורי 3PC עם הכנה למפעיל 3-PC. SCREWED END BALL VALVE 316 L

With M.Pod

FEATURES

- Full port, 1/4"~4" (DN8~DN100)
- W.P. : 1000 WOG (PN63)
- W.T. : -20℃~200℃ (-4℉~392℉)
- Investment casting
- Blow-out proof stem
- Live-loading design
- Locking device
- Anti-static device
- ISO 5211 Direct mounting pad
- Length conform to DIN 3202/4-M3-2013ND-M3 (option)
- ISO 15848 fugitive emission approved (option)
- Automation accessories (option)

- Thread type: ASME B1.20.1 (NPT)
  DIN2999 & BS21
  ISO7/1 & EN10226

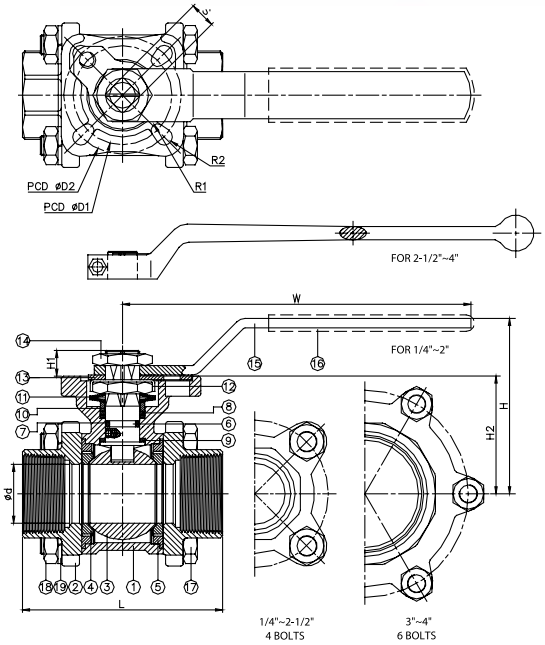

ITEM	PARTS	MATERIAL	
1	BODY	ASTM A351-CF8M	ASTM A216-WCB
2	CAP		
3	BALL	ASTM A351-CF8M	
4	SEAT	PTFE / RTFE	
5	SEAL	PTFE	
6	STEM	ASTM A276-316	
7	O-RING	VITON	
8	PACKING	PTFE	
9	THRUST WASHER		
10	GLAND RING	AISI 304	
11	BELLEVILLE WASHER	AISI 301	
12	LOCKING WASHER	AISI 304	
13	LOCKING DEVICE		
14	STEM NUT		
15	HANDLE	STAINLESS STEEL	
16	HANDLE SLEEVE	PVC	
17	BOLT	AISI 304	
18	NUT		
19	SPRING WASHER		

DN	d	L	H	H1	H2	W	S	D1	D2	R1	R2	ISO 5211	Torque (N-M)	Weight (kg)
8	11.6	65	61	7.5	35.3	114.5	9	36	42	2.75	2.75	F03 / F04	7	-
10	12.5	65	61	7.5	35.3	114.5	9	36	42	2.75	2.75	F03 / F04	7	-
15	15	65	62.7	7.1	36.4	114.5	9	36	42	2.75	2.75	F03 / F04	7	0.6
20	20	75	65.1	7.3	39.5	114.5	9	36	42	2.75	2.75	F03 / F04	9	0.7
25	25	85	76.5	11	49	140	11	42	50	2.75	3.5	F04 / F05	15	1.1
32	32	101	82	11.5	54.2	140	11	42	50	2.75	3.5	F04 / F05	18	1.7
40	38	112	102	12.4	64.6	172	14	50	70	3.5	4.5	F05 / F07	25	2.6
50	50	130	110.1	13.6	72.5	172	14	50	70	3.5	4.5	F05 / F07	35	3.7
65	63	162	127.3	16.3	92	325	17	70	102	4.5	5.5	F07 / F10	55	7.1
80	76	188	136.3	16.3	100	325	17	70	102	4.5	5.5	F07 / F10	70	10.2
100	96	224	142.5	20.5	130	325	22	102	125	5.5	6.5	F10 / F12	90	19.4

NPS	d	L	H	H1	H2	W	S	D1	D2	R1	R2	ISO 5211	Torque (in-lb)	Weight (in)
1/4"	0.46	2.56	2.4	0.3	1.39	4.51	0.35	1.42	1.65	0.11	0.11	F03 / F04	62	-
3/8"	0.46	2.56	2.4	0.3	1.39	4.51	0.35	1.42	1.65	0.11	0.11	F03 / F04	62	-
1/2"	0.59	2.56	2.47	0.28	1.43	4.51	0.35	1.42	1.65	0.11	0.11	F03 / F04	62	1.2
3/4"	0.79	2.95	2.56	0.29	1.56	4.51	0.35	1.42	1.65	0.11	0.11	F03 / F04	79.7	1.6
1"	0.98	3.35	3.01	0.43	1.93	5.51	0.43	1.65	1.97	0.11	0.14	F04 / F05	132.8	2.4
1-1/4"	1.26	3.98	3.23	0.45	2.13	5.51	0.43	1.65	1.97	0.11	0.14	F04 / F05	159.3	3.7
1-1/2"	1.5	4.41	4.02	0.49	2.54	6.77	0.55	1.97	2.76	0.14	0.18	F05 / F07	221.3	5.7
2"	1.97	5.12	4.33	0.54	2.85	6.77	0.55	1.97	2.76	0.14	0.18	F05 / F07	309.8	8.2
2-1/2"	2.48	6.38	5.01	0.64	3.62	12.8	0.67	2.76	4.02	0.18	0.22	F07 / F10	486.8	15.7
3"	2.99	7.4	5.37	0.64	3.94	12.8	0.67	2.76	4.02	0.18	0.22	F07 / F10	619.5	22.5
4"	3.78	8.82	5.61	0.81	5.12	12.8	0.87	4.02	4.02	0.22	0.26	F10 / F12	796.6	42.8

* ניתן לחדש אטמים

ברז כדורי 3PC ללא הכנה למפעיל 3-PC. SCREWED END BALL VALVE 316 L

FEATURES

- Full port, 1/4"~4" (DN8~DN100)
- W. P.: 1000 WOG(PN63)
- W. T.:-20°C ~200°C (-4°F~392°F)
- Investment casting
- Blow-out proof stem
- Locking device
- TA-Luft approved (option)
- Length conform to DIN 3202/4-M3-2013N-M3 (option)
- Thread type: ASME B1.20.1 (NPT)
  DIN2999 & BS21
  ISO7/1 & EN10226

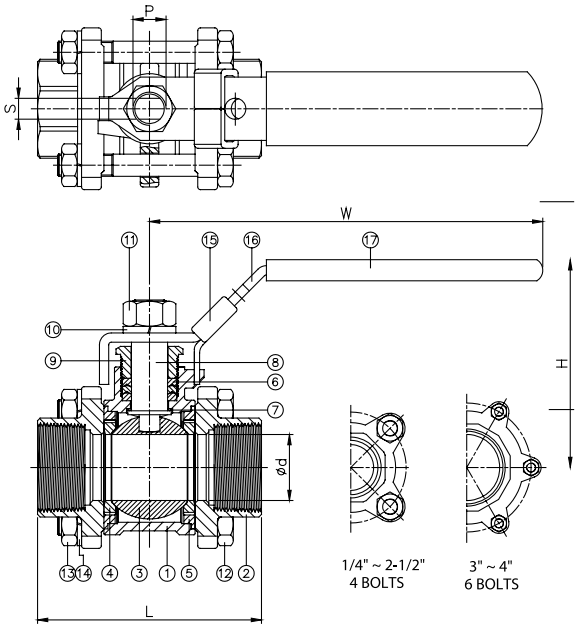

ITEM	PARTS	MATERIAL	
1	BODY	ASTM A351-CF8M	ASTM A216-WCB
2	CAP		
3	BALL	ASTM A351-CF8M	
4	SEAT	PTFE / RTFE	
5	SEAL	PTFE	
6	PACKING		
7	THRUST WASHER		
8	STEM	ASTM A276-316	
9	GLAND	AISI 304	
10	SPRING WASHER		
11	STEM NUT		
12	BOLT		
13	NUT		
14	SPRING WASHER		
15	LOCKING DEVICE	STAINLESS STEEL	
16	HANDLE		
17	HANDLE SLEEVE	PVC	

DN	d	L	H	W	S	P	Torque (N-M)	Weight(kg)
8	11.6	65	60.2	98	5	3/8"~24UNF	3.5	0.4
10	12.5	65	60.2	98	5	3/8"~24UNF	4	0.4
15	15	65	62.2	98	5	3/8"~24UNF	5.5	0.5
20	20	75	64.6	121	6.5	7/16"~20UNF	7.5	0.7
25	25	85	80.1	147	8	7/16"~20UNF	11	1.1
32	32	101	85.1	147	8	7/16"~20UNF	15	1.6
40	38	112	103.3	188	10	1/2"~20UNF	20	2.4
50	50	130	110.8	188	10	1/2"~20UNF	40	3.1
65	63	162	141.7	245	12	3/4"~10UNC	60	6.5
80	76	188	150.4	245	12	3/4"~10UNC	85	9.5
100	96	224	181.7	316	16	1"~8UNC	150	19

NPS	d	L	H	W	S	P	Torque (in-lb)	Weight(lb)
1/4"	0.46	2.56	2.37	3.86	0.2	3/8"~24UNF	31	0.8
3/8"	0.49	2.56	2.37	3.86	0.2	3/8"~24UNF	35.4	0.8
1/2"	0.59	2.56	2.45	3.86	0.2	3/8"~24UNF	48.7	1.1
3/4"	0.79	2.95	2.54	4.76	0.26	7/16"~20UNF	66.4	1.5
1"	0.98	3.35	3.15	5.79	0.31	7/16"~20UNF	97.4	2.3
1-1/4"	1.26	3.98	3.35	5.79	0.31	7/16"~20UNF	132.8	3.5
1-1/2"	1.5	4.41	4.07	7.4	0.39	1/2"~20UNF	177	5.3
2"	1.97	5.12	4.36	7.4	0.39	1/2"~20UNF	354	6.8
2-1/2"	2.48	6.38	5.58	9.65	0.47	3/4"~10UNC	531	14.3
3"	2.99	7.4	5.92	9.65	0.47	3/4"~10UNC	752.3	20.9
4"	3.78	8.82	7.15	12.44	0.63	1"~8UNC	1327.6	41.9

* ניתן לחדש אטמים

ברז כדורי תלת דרכי עם הכנה למפעיל 3-WAY SCREWED END BALL VALVE

316 L

FEATURES

L port / T port, 1/4"~2" (DN8~DN50)
W. P.: 1000 WOG (PN63)
W. T.:-20°C ~200°C (-4°F~392°F)
Investment casting
Blow-out proof stem
Locking device
Anti-static device (option)
ISO 5211 mounting pad
Thread type: ASME B1.20.1 (NPT)
DIN2999 & BS21,
ISO 7/1 & EN10226

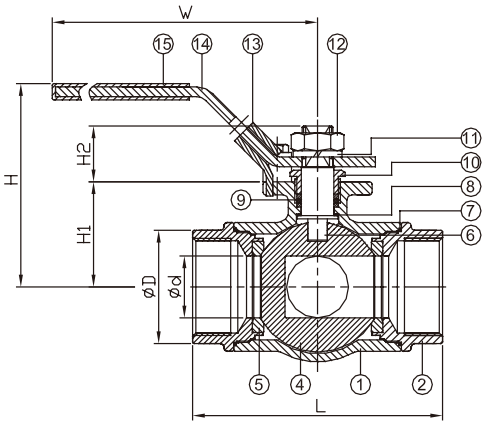

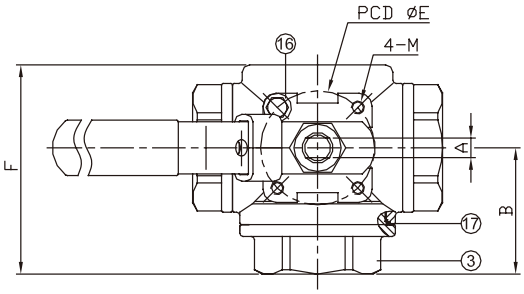

ITEM	PARTS	MATERIAL
1	BODY	ASTM A351-CF8M
2	CAP-A	
3	CAP-B	
4	BALL	
5	SEAT	PTFE/RTFE
5	SEAT	PTFE
6	STEM	AISI 316
7	SEAL-A	PTFE
8	THRUST WASHER	
9	PACKING	
10	GLAND NUT	AISI 304
11	SPRING WASHER	
12	STEM NUT	
13	LOCKING DEVICE	
14	HANDLE	
15	HANDLE SLEEVE	PVC
16	STOP PIN	AISI 304
17	SEAL-B	PTFE

* ניתן לרכוש כדור T-PORT להחלפה ובלי תפר

DN	d	D	L	B	F	H	W	E	M	H1	H2	A	Torque(N-M)
8	11.6	25.5	76	37.3	58.5	67	153	42	M5	29.1	18	8	7.9
10	12.5	25.5	76	37.3	58.5	67	153	42	M5	29.1	18	8	8.1
15	12.5	25.5	76	37.3	58.5	67	153	42	M5	29.1	18	8	11.3
20	16	32	86	44	72	77	153	42	M5	38.5	20	8	14.5
25	20	38.5	99	49	81.5	83	183	50	M6	43	23	9.5	20
32	25	48.5	117	57	94.5	88	183	50	M6	47.8	23	9.5	23.8
40	32	58.5	124	61.3	104	116	246	70	M8	55.7	34	12.5	34.8
50	38	69.5	148	74.3	125	124	246	70	M8	64.5	34	12.5	58.1
65	63	146.2	141	20.5	91.5	310	17	76	70	102	4.5	5.5	60
80	76	163.7	150	20.5	100.75	310	17	76	70	102	4.5	5.5	85

NPS	d	D	L	B	F	H	W	E	M	H1	H2	A	Torque(in-lb)
1/4"	0.46	1	2.99	1.47	2.3	2.64	6.02	1.65	M5	1.15	0.71	0.31	70.1
3/8"	0.49	1	2.99	1.47	2.3	2.64	6.02	1.65	M5	1.15	0.71	0.31	72
1/2"	0.49	1	2.99	1.47	2.3	2.64	6.02	1.65	M5	1.15	0.71	0.31	100.3
3/4"	0.63	1.26	3.39	1.73	2.83	3.03	6.02	1.65	M5	1.52	0.79	0.31	128.5
1"	0.79	1.52	3.9	1.93	3.21	3.27	7.2	1.97	M6	1.69	0.91	0.37	177.2
1-1/4"	0.98	1.91	4.61	2.24	3.72	3.46	7.2	1.97	M6	1.88	0.91	0.37	210.3
1-1/2"	1.26	2.3	4.88	2.41	4.09	4.57	9.69	2.76	M8	2.19	1.34	0.49	307.7
2"	1.5	2.74	5.83	2.93	4.92	4.88	9.69	2.76	M8	2.54	1.34	0.49	514

מפעיל פנאומטי אויר-קפיץ Pneumatic Actuator-HTS052~092

HTS052 ~ 092

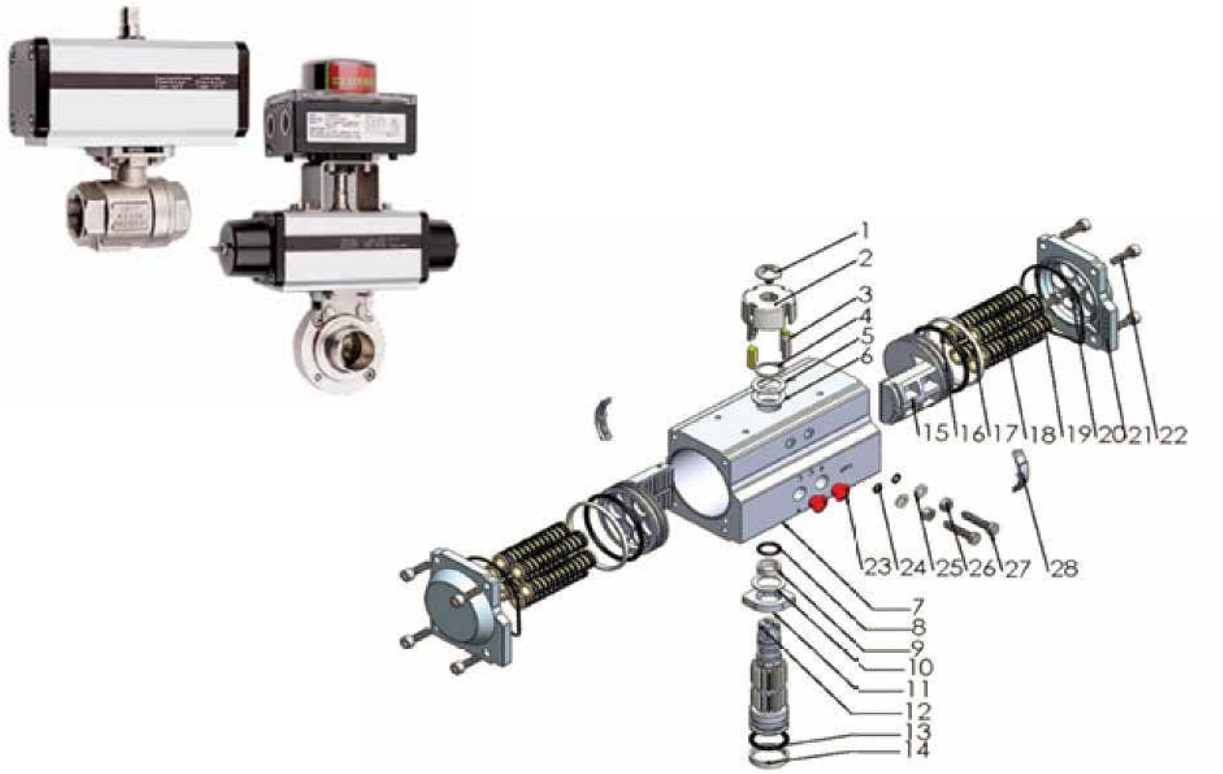

Item	Description	Material	Protection	Q'ty	Optional
1	Screw	ABS+304		1	
2	Indicator	Plastic		1	
3	Indicator Pin	ABS		4	
4	Spring Clip	Stainless Steel		1	
5	Thrust Washer (Pinion)	Stainless Steel		1	
6*	Thrust Bearing (Pinion)	POM		1	
7	Actuator Body Extruded	Extruded Aluminum Alloy	Hard Anodized (over 30μm)	1	
8*	O-Ring (Top Pinion)	NBR		1	Viton/Silicone
9*	Bearing (Top Pinion)	POM		1	
10*	Thrust Bearing (Pinion)	POM		1	
11	Stroke Cam	Stainless Steel		1	
12	Pinion	Alloy Steel	Nickel Plated (over 25μm)	1	
13*	Bearing (Lower Pinion)	POM		1	
14*	O-Ring (Lower Pinion)	NBR		1	Viton/Silicone
15	Piston	Die Cast Aluminum Alloy	Hard Anodized (over 30μm)	2	
16*	Piston Seal	NBR		2	Viton/Silicone
17*	Piston Bearing	Stainless Steel		2	
18	Spring (Cartridge)	High Performance Spring Steel	Zinc Phosphate Coated	0-12	
19*	End Cap Seals	NBR		2	Viton/Silicone
20	Stroke Bolt	Stainless Steel		1	
21	End Cap	Die Cast Aluminum	Epoxy Coated (over 150μm)	2	
22	End Cap Bolts	Stainless Steel		8	
23	Plug	PE		2	
24*	Stroke Bolt O-Ring	NBR		2	Viton/Silicone
25	Stroke Bolt Washer	Stainless Steel		2	
26	Stroke Bolt Retaining Nut	Stainless Steel		2	
27	Stroke Bolt	Stainless Steel		2	
28*	Piston Guide	POM		2	
*Note: Recommended spare parts for maintenance					

* ניתן להזמין יחד עם ברז כסט מורכב וניתן להזמין מפעיל בנפרד, אפשר להרכיב מפעיל על ברזים כדורים, תלת דרכי ומאוגנים.

מפעיל פנאומטי אויר קפיץ Pneumatic Actuator-HTS105~270

HTS105 ~ 270

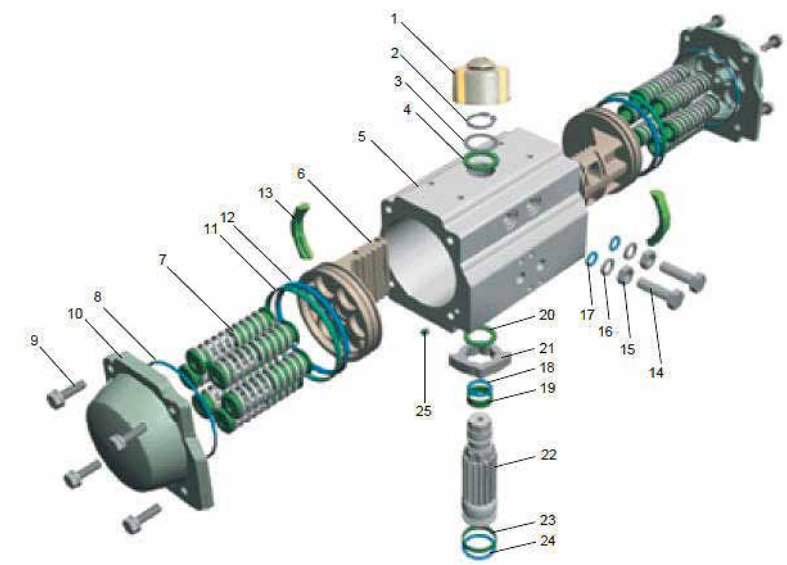

Item	Description	Material	Protection	Q'ty	Optional
1	Indicator	ABS		1	
2	Spring Clip	Stainless Steel		1	
3	Thrust Washer (Pinion)	Stainless Steel		1	
4	Thrust Bearing (Pinion)	PTFE+15%Graphite		1	
5	Actuator Body	Extruded Alluminum Alloy	Hard Anodized (over 30μm)	1	Nickel or PTFE Plated
6	Piston	Die Cast Aluminum Alloy	Hard Anodized (over 30μm)	2	
7	Spring (Cartridge)	High Performance Spring Steel	Electrophoretic Paint	0-12	
8*	End Cap Seals	NBR		2	Viton / Silicone
9	End Cap Bolts	Stainless Steel		8	
10	End Cap	Die Cast Aluminum	Epoxy Coated (over 150μm)	2	Nickel or PTFE Plated
11*	Piston Bearing	POM		2	
12*	Piston Seal	NBR		2	Viton / Silicone
13*	Piston Guide	POM		2	
14	Stroke Bolt	Stainless Steel		2	
15	Stroke Bolt Retaining Nut	Stainless Steel		2	
16	Stroke Bolt Washer	Stainless Steel		2	
17*	Stroke Bolt O-Ring	NBR		2	Viton / Silicone
18*	O-Ring (Top Pinion)	NBR		1	Viton / Silicone
19*	Bearing (Top Pinion)	POM		1	
20*	Thrust Bearing (Pinion)	POM		1	
21	Stroke Cam	Carbon Steel	Galvanized	1	
22	Pinion	Alloy Steel	Nickel Plated (over 25μm)	1	
23*	Bearing (Lower Pinion)	POM		1	
24*	O-Ring (Lower Pinion)	NBR		1	Viton / Silicone
25*	Plug	NBR		2	Viton / Silicone
*Note: Recommended spare parts for maintenance.					

* ניתן להזמין יחד עם ברז כסט מורכב וניתן להזמין מפעיל בנפרד
אפשר להרכיב מפעיל על ברזים כדורים, תלת דרכי ומאוגנים.

מפעיל פנאומטי אויר-אויר Pneumatic Actuator – HTD032 Parts List

HTD ~ 032

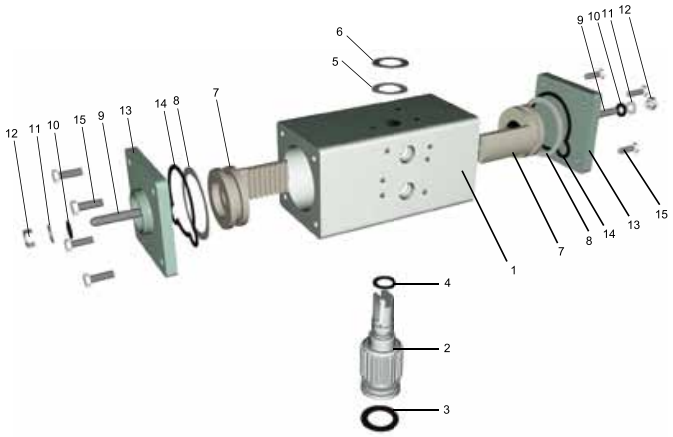

Item	Description	Material	Protection	Q'ty	Optional
1	Actuator Body	Extruded Alluminum Alloy	Hard Anodized (over 30um)	1	Nickel or PTFE Plated
2	Pinion	Alloy Steel	Nickel Plated (over 25um)	1	
3*	O-Ring(Lower Pinion)	NBR		1	Viton / Silicone
4*	O-ring(Top Pinion)	NBR		1	Viton / Silicone
5	Thrust Bearing(Pinion)	POM		1	
6	Spring Clip	Stainless Steel		1	
7	Piston	Die Cast Aluminum Alloy	Hard Anodized (over 30um)	2	
8*	Piston Seal	NBR		2	Viton / Silicone
9	Stroke Bolt	Stainless Steel		2	
10*	Stroke Bolt O-Ring	NBR		2	Viton / Silicone
11	Stroke Bolt Washer	Stainless Steel		2	
12	Stroke Bolt Retaining Nut	Stainless Steel		2	
13	End Cap	Die Cast Aluminum	Epoxy Coated (over 150um)	2	Nickel or PTFE Plated
14*	End Cap Seals	NBR		2	Viton / Silicone
15	End Cap Bolts	Stainless Steel		8	
					*Note: Recommended spare parts for maintenance.

מפסק למפעילים OPEN(YELLOW) CLOSE(RED)

Position Monitoring Switchbox:

Model	ALS-100	ALS-200	ALS-300	ALS-400	ALS-500(AL) / ALS-600(SS)
Weather Proof	IP67 / NEMA 4,4X	CSA / IP67 / NEMA 4,4X	IP67 / NEMA 4,4X	IP67	IP67
Explosion Proof	---	---	---	IECEx / ATEX	ExdII CT6 / DIPA21 T_A,T6 IECEx / ATEX
Temperature Range	-25°C~85°C				
Cable Entry	M20x1.5	G1/2", 1/2"NPT M20x1.5, M16x1.5	G1/2", 1/2"NPT M20x1.5, M16x1.5	G1/2", F3/4", 1/2"NPT 3/4"NPT, M20x1.5	G1/2", F3/4", 1/2"NPT 3/4"NPT, M20x1.5
Terminal Stripe	8~14				
Position Indicator	0~90° Open-Yellow Close-Red				
(Mech.Sw itches)Type	5A/16A 125~250VAC				
	M2:2SPDT M3:3SPDT M5:2DPDT ML2:2SPDT(-40°C) MG2:2SPDT(Gilded)	M2:2SPDT M5:2DPDT MG2:2SPDT(Gilded)	M2:2SPDT M3:3SPDT M4:4SPDT M5:2DPDT ML2:2SPDT(-40°C) MG2:2SPDT(Gilded)	M2:2SPDT M3:3SPDT M4:4SPDT M5:2DPDT ML2:2SPDT(-40°C) MG2:2SPDT(Gilded)	M2:2SPDT M3:3SPDT M4:4SPDT M5:2DPDT MZ:Straight trip ML2:2SPDT(-40°C) MG2:2SPDT(Gilded)
(Proximity Sensor)Type	DC 24V (10~30VDC), <=150mA				
	PP:P&F (NAMUR) Exia ‖ CT6 PA:2(wires) or 3(wires)				
(Magnet Sensor)Type	5~240VAC/DC, <=300mA				
	QA:PA:2(wires) or 3(wires)				
(Expand options)Type			4-20mA (Valve position feedback)		

Outline Dimension:
ALS-100 Classic Type

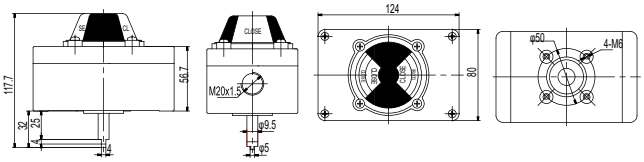

* ניתן להזמין יחד עם ברז כסס מורכב וניתן להזמין מפעיל בנפרד
אפשר להרכיב מפעיל על ברזים כדורים, תלת דרכי ומאוגנים.

עוגן עיוור 16PN/10PN 304/316 BLIND FLANGE PN10/PN16 A-182 304/316

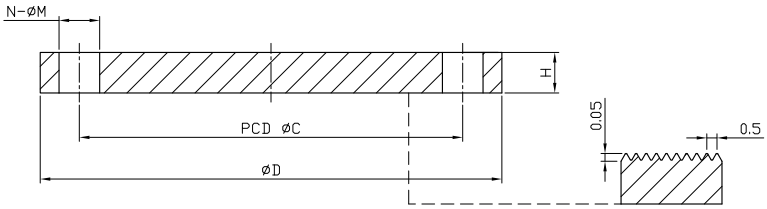

DIN 2527 PN10 BLFF					
SIZE	C	D	H	N	M
DN10	60	90	14	4	14
DN15	65	95	14	4	14
DN20	75	105	16	4	14
DN25	85	115	16	4	14
DN32	100	140	16	4	18
DN40	110	150	16	4	18
DN50	125	165	18	4	18
DN65	145	185	18	4	18
DN80	160	200	20	8	18
DN100	180	220	20	8	18
DN125	210	250	22	8	18
DN150	240	285	22	8	22
DN200	295	340	24	8	22
DN250	350	395	26	12	22
DN300	400	445	26	12	22
DN350	460	505	26	16	22
DN400	515	565	26	16	26
DN500	620	670	28	20	26
					UNIT:MM

DIN 2527 PN16 BLFF					
SIZE	C	D	H	N	M
DN10	60	90	14	4	14
DN15	65	95	14	4	14
DN20	75	105	16	4	14
DN25	85	115	16	4	14
DN32	100	140	16	4	18
DN40	110	150	16	4	18
DN50	125	165	18	4	18
DN65	145	185	18	4	18
DN80	160	200	20	8	18
DN100	180	220	20	8	18
DN125	210	250	22	8	18
DN150	240	285	22	8	22
DN200	295	340	24	12	22
DN250	355	405	26	12	26
DN300	410	460	28	12	26
DN350	470	520	30	16	26
DN400	525	580	32	16	30
DN500	650	715	36	20	33
					UNIT:MM

אוגן עיוור #150 A-182 AMSE B16.5 RF 304/316

ASME B16.5 ASA150 BLRF

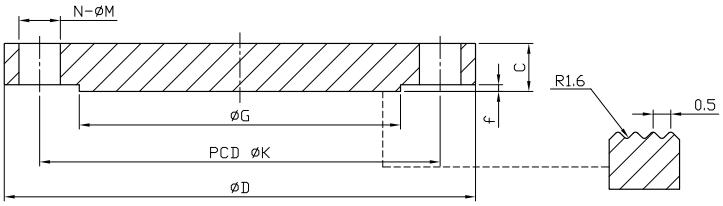

ASME B16.5 150LB BLRF						
D	C	G	K	f	N	M
90	11.6	34.9	60.3	2	4	15.9
100	13.2	42.9	69.9	2	4	15.9
110	14.7	50.8	79.4	2	4	15.9
115	16.3	63.5	88.9	2	4	15.9
125	17.9	73	98.4	2	4	15.9
150	19.5	92.1	120.7	2	4	19.1
180	22.7	104.8	139.7	2	4	19.1
190	24.3	127	152.4	2	4	19.1
215	24.3	139.7	177.8	2	8	19.1
230	24.3	157.2	190.5	2	8	19.1
255	24.3	185.7	215.9	2	8	22.2
280	25.9	215.9	241.3	2	8	22.2
345	29	269.9	298.5	2	8	22.2
405	30.6	323.8	362	2	12	25.4
485	32.2	381	431.8	2	12	25.4
535	35.4	412.8	476.3	2	12	28.6
595	37	469.9	539.8	2	16	28.6
635	40.1	533.4	577.9	2	16	31.8
700	43.3	584.2	635	2	20	31.8
815	48.1	692.2	749.3	2	20	34.9
						unit:mm

סטאב אנד סקדיול 10/40

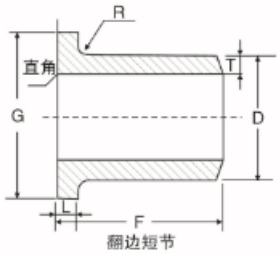

翻边短节
Lap Joint Stub End

公称尺寸 Nominal size		端部外径 OD of Barrel			长度 Length		圆角半径 Radius of fillet		搭接直径 Diameter of lap
		D			F		R		
DN	NPS	OD	Max	Min	长型 Long pattern	短型 Short pattern	A	B Max	G
15	1/2	21.3	22.8	20.5	76	51	3	0.8	35
20	3 /4	26.7	28.1	25.9	76	51	3	0.8	43
25	1	33.4	35.0	32.6	102	51	3	0.8	51
32	1 1/4	42.2	43.6	41.4	102	51	5	0.8	64
40	1 1/2	48.3	49.9	47.5	102	51	6	0.8	73
50	2	60.3	62.4	59.5	152	64	8	0.8	92
65	2 1/2	73.0	75.3	72.2	152	64	8	0.8	105
80	3	88.9	91.3	88.1	152	64	10	0.8	127
90	3 1/2	101.6	104.0	100.8	152	76	10	0.8	140
100	4	114.3	116.7	113.5	152	76	11	0.8	157
125	5	141.3	144.3	140.5	203	76	11	1.6	186
150	6	168.3	171.3	167.5	203	89	13	1.6	216
200	8	219.1	222.1	218.3	203	102	13	1.6	270
250	10	273.0	277.2	272.3	254	127	13	1.6	324
300	12	323.8	328.0	323.1	254	152	13	1.6	381
350	14	355.6	359.9	354.8	305	152	13	1.6	413
400	16	406.4	411.0	405.6	305	152	13	1.6	470
450	18	457.0	462.0	456.0	305	152	13	1.6	533
500	20	508.0	514.0	507.0	305	152	13	1.6	584
550	22	559.0	565.0	558.0	305	152	13	1.6	641
600	24	610.0	616.0	609.0	305	152	13	1.6	692

אוגן חופשי LAP JOINT 304/316

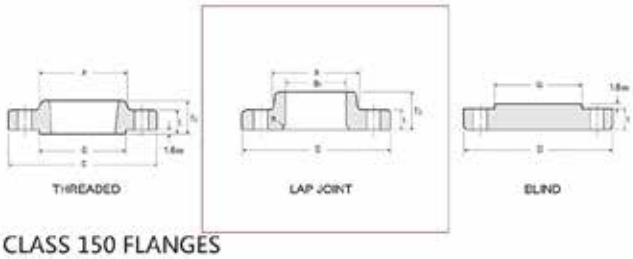

CLASS 150 FLANGES

ANSI B16.5 FORGED FLANGES

Unit:mm

Nominal Pipe Size	Outside Diam	Diam. at Base of Hub	O.D. of Raised Face	Thickness	BORE			LENGTH THRU HUB			Diam of Hub at Bevel	Radius of Fillet	Thread Length
					Welding Neck Socket Welding	Slip-on Socket Welding	Lap Joint	Welding Neck	Slip-on Threaded Socket Welding	Lap Joint			
	D	X	G	t	B1	B2	B3	T1	T2	T3	A	R	Q
1/2	88	30.2	35.1	11.2	15.7	22.4	22.9	47.8	15.7	15.7	21.3	3.0	15.7
3/4	99	38.1	42.9	12.7	20.8	27.7	28.2	52.3	15.7	15.7	26.7	3.0	15.7
1	108	49.3	50.8	14.2	26.7	34.5	35.1	55.6	17.5	17.5	33.5	3.0	17.5
1 1/4	117	58.7	63.5	15.7	35.1	43.2	43.7	57.2	20.6	20.6	42.2	4.8	20.6
1 1/2	127	68.0	73.2	17.5	40.9	49.5	50.0	62.0	22.4	22.4	48.3	6.4	22.4
2	152	77.7	91.9	19.1	52.6	62.0	62.5	63.5	25.4	25.4	60.5	7.9	25.4
2 1/2	178	90.4	104.6	22.4	62.7	74.7	75.4	69.9	28.4	28.4	73.2	7.9	28.4
3	191	108.0	127.0	23.9	78.0	90.1	91.4	88.9	30.2	30.2	88.9	9.7	30.2
3 1/2	216	122.2	138.7	23.9	90.2	103.4	104.1	71.4	31.8	31.8	101.6	9.7	31.8
4	229	134.9	157.2	23.9	102.4	116.1	116.8	76.2	33.3	33.3	114.3	11.2	33.3
5	254	163.6	185.7	23.9	128.3	143.3	144.3	88.9	36.6	36.6	141.2	11.2	36.6
6	279	192.0	215.9	25.4	154.2	170.7	171.3	88.9	39.6	39.6	168.4	12.7	39.6
8	343	246.1	269.7	28.4	202.7	221.5	222.2	101.6	44.5	44.5	219.2	12.7	44.5
10	406	304.8	323.9	30.2	254.5	276.4	277.4	101.6	49.3	49.3	273.1	12.7	49.3
12	483	355.3	381.0	31.8	304.8	327.2	328.2	114.3	55.6	55.6	323.9	12.7	55.6
14	533	400.1	412.8	35.1	336.6	359.2	360.2	127.0	57.2	57.2	355.6	12.7	57.2
16	597	457.2	469.9	36.6	387.4	410.5	411.2	127.0	63.5	63.5	406.4	12.7	63.5
18	635	508.0	533.4	39.6	438.2	461.8	462.3	139.7	68.3	68.3	457.2	12.7	68.3
20	699	558.8	584.2	42.9	489.0	513.1	514.4	144.5	73.2	73.2	508.0	12.7	73.2
24	813	663.4	692.2	47.8	590.6	616.0	616.0	152.4	82.6	82.6	609.6	12.7	82.6

CLASS 150 FLANGES

ANSI B16.5 FORGED FLANGES

Unit:mm

Nominal Pipe Size	Depth of Socket	DRILLING			BOLTING				APPROXIMATE WEIGHT						
		Bolt Circle Diam	Number of Holes	Diam of Holes	Diam of Bolts (Studs)	Machine Bolt Length	Stud Bolt Length		Welding Neck			Slip-on and Threaded	Lap Joint	Blind	Socket Welding
							Raised Face	Ring Joint	SCH40	SCH80	SCH160				
	T														
1/2	9.7	60.5	4	15.7	1/2	50.8	57.2	–	0.60	0.60	0.60	0.41	0.40	0.49	0.41
3/4	11.2	69.9	4	15.7	1/2	50.8	63.5	–	0.90	0.90	0.90	0.58	0.58	0.63	0.58
1	12.7	79.2	4	15.7	1/2	57.2	63.5	76.2	1.14	1.19	1.24	0.80	0.80	0.89	0.80
1 1/4	14.2	88.9	4	15.7	1/2	57.2	69.9	82.6	1.41	1.48	1.54	1.07	1.07	1.22	1.07
1 1/2	15.7	98.6	4	15.7	1/2	63.5	69.9	82.6	1.81	1.90	2.07	1.37	1.37	1.58	1.37
2	17.5	120.7	4	19.1	5/8	69.9	82.6	95.3	2.72	2.84	3.07	2.21	2.21	2.39	2.21
2 1/2	19.1	139.7	4	19.1	5/8	76.2	88.9	101.6	4.45	4.70	4.98	3.32	3.34	4.07	3.32
3	20.6	152.4	4	19.1	5/8	76.2	88.9	101.6	5.22	5.54	5.90	3.83	3.80	4.90	3.83
3 1/2	22.4	177.8	8	19.1	5/8	76.2	88.9	101.6	6.40	6.78	7.46	5.20	5.20	5.90	5.20
4	23.9	190.5	8	19.1	5/8	76.2	88.9	101.6	7.49	7.98	8.90	5.40	5.40	7.13	5.90
5	23.9	215.9	8	22.4	3/4	82.6	95.3	108.0	9.93	10.54	12.64	6.26	6.26	8.72	6.80
6	26.9	241.3	8	22.4	3/4	82.6	101.6	114.3	11.80	12.52	15.11	7.80	7.80	11.40	8.80
8	31.8	298.5	8	22.4	3/4	88.9	108.0	120.7	19.10	21.34	25.84	12.30	12.40	20.10	13.60
10	35.3	362.0	12	25.4	7/8	101.6	114.3	127.0	28.50	28.86	35.34	17.10	17.10	28.70	19.50
12	39.6	431.8	12	28.4	7/8	101.6	120.7	133.4	39.90	46.80	58.61	26.60	26.58	43.80	29.10
14	41.4	476.3	12	28.4	1	114.3	133.4	146.1	51.80	62.58	77.60	34.50	38.58	58.30	40.00
16	44.5	539.8	16	28.4	1	114.3	133.4	146.1	64.30	79.42	98.52	45.90	51.26	77.40	44.50
18	49.3	577.8	16	31.8	1 1/8	127.0	146.1	158.8	74.90	90.60	114.10	58.90	66.30	96.00	50.00
20	54.1	635.0	20	31.8	1 1/8	130.7	158.8	171.5	89.40	120.44	154.18	61.90	70.00	122.70	74.00
24	62.5	749.3	20	35.1	1 1/4	152.4	171.5	184.2	121.70	168.37	223.82	87.70	98.70	187.00	99.00

* ניתן להזמין מסוג: ASCH10, SCH10S, SCH40, SCH40S, 304L/316L

אוגנים SORF 304/316

ASME B16.5 ASA150 SORF

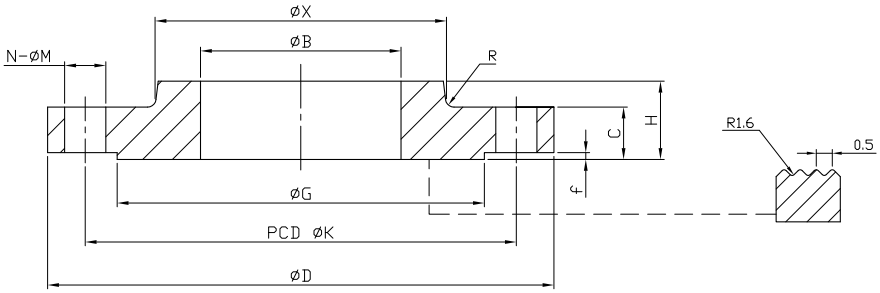

	Outside Diametr	Diametr at Base of Hub	OD of RF	Thickness	Bore	Length Hub
NPS	Outside Diametr	X	G	C	B2	H
1/2	89	30.2	35.1	11.2	22.4	15.7
3/4	99	38.1	42.9	12.7	27.7	15.7
1	108	49.3	50.8	14.2	34.5	17.5
11/4	117	58.7	63.5	15.7	43.2	20.6
11/2	127	65	73.2	17.5	49.5	22.4
2	152	77.7	91.9	19.1	62	25.4
21/2	178	90.4	104.6	22.4	74.7	28.4
3	191	108	127	23.9	90.7	30.2
31/2	216	122.2	139.7	23.9	103.4	31.8
4	229	134.9	157.2	23.9	116.1	33.3
5	254	163.6	185.7	23.9	143.8	36.6
6	279	192	215.9	25.4	170.7	39.6
8	343	246.1	269.7	28.4	221.5	44.5
10	406	304.8	323.9	30.2	276.4	49.3
12	483	365.3	381	31.8	327.2	55.6
14	533	400.1	412.8	35.1	359.2	57.2
16	597	457.2	469.9	36.6	410.5	63.5
18	635	505	533.4	39.6	461.8	68.3
20	699	558.8	584.2	42.9	513.1	73.2
24	813	663.4	692.2	47.8	616	82.6

DIN 2543 PN16 SORF

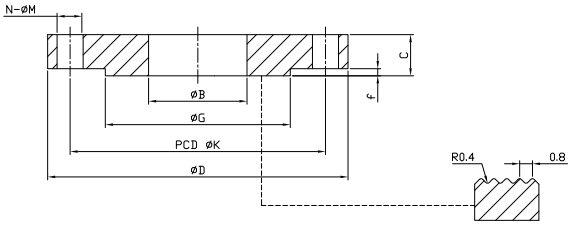

DIN 2543 PN16 SORF								
SIZE	B	G	K	D	C	f	N	M
DN10/17.2	17.7	40	60	90	14	2	4	14
DN15/21.3	22	45	65	95	14	2	4	14
DN20/26.9	27.6	58	75	105	16	2	4	14
DN25/33.7	34.4	68	85	115	16	2	4	14
DN32/42.4	43.1	78	100	140	16	2	4	18
DN40/48.3	49	88	110	150	16	3	4	18
DN50/60.3	61.1	102	125	165	18	3	4	18
DN65/76.1	77.1	122	145	185	18	3	4	18
DN80/88.9	90.3	138	160	200	20	3	8	18
DN100/114.3	115.9	158	180	220	20	3	8	18
DN125/139.7	141.6	188	210	250	22	3	8	18
DN150/168.3	170.5	212	240	285	22	3	8	22
DN175/193.7	196.1	242	270	315	24	3	8	22
DN200/219.1	221.8	268	295	340	24	3	12	22
DN250/273	276.2	320	355	405	26	3	12	26
DN300/323.9	327.6	378	410	460	28	4	12	26
DN350/355.6	359.7	438	470	520	30	4	16	26
DN400/406.4	411	490	525	580	32	4	16	30
DN500/508	513.6	610	650	715	38	4	20	33

unit:mm

DIN 2576 PN10 SORF

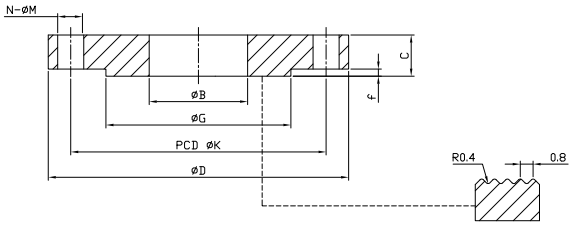

DIN 2576 PN10 SORF								
SIZE	B	G	K	D	C	f	N	M
DN10/17.2	17.7	40	60	90	14	2	4	14
DN15/21.3	22	45	65	95	14	2	4	14
DN20/26.9	27.6	58	75	105	16	2	4	14
DN25/33.7	34.4	68	85	115	16	2	4	14
DN32/42.4	43.1	78	100	140	16	2	4	18
DN40/48.3	49	88	110	150	16	3	4	18
DN50/60.3	61.1	102	125	165	18	3	4	18
DN65/76.1	77.1	122	145	185	18	3	4	18
DN80/88.9	90.3	138	160	200	20	3	8	18
DN100/114.3	115.9	158	180	220	20	3	8	18
DN125/139.7	141.6	188	210	250	22	3	8	18
DN150/168.3	170.5	212	240	285	22	3	8	22
DN175/193.7	196.1	242	270	315	24	3	8	22
DN200/219.1	221.8	268	295	340	24	3	8	22
DN250/273	276.2	320	350	395	26	3	12	22
DN300/323.9	327.6	370	400	445	26	4	12	22
DN350/355.6	359.7	430	460	505	28	4	16	22
DN400/406.4	411	482	515	565	32	4	16	26
DN500/508	513.6	585	620	670	38	4	20	26

unit:mm

עוגן עם צווארון 304/316 SCH10/40 B16.5 150# A-182 WNRF 3

ASME B16.5 ASA150 WNRF

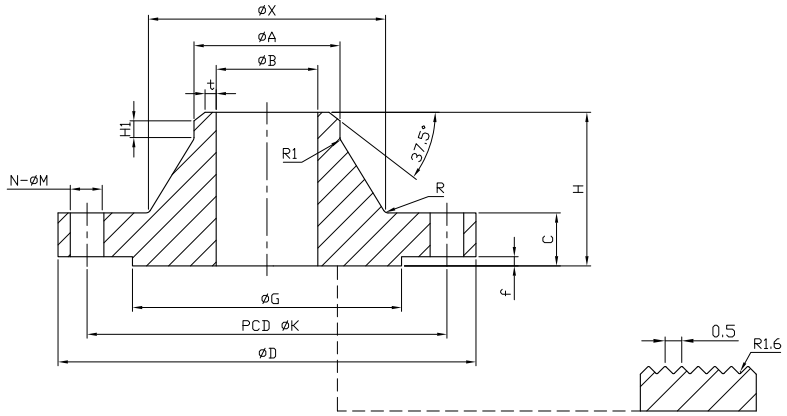

ASME B16.5 150LB WNRF STD															
SIZE	B	A	X	G	K	D	C	H	H1	f	t	N	M	R	R1
DN15	15.7	21.3	30	34.9	60.3	90	11.6	48	6.4	2	1.6	4	15.9	4	3
DN20	20.9	26.7	38	42.9	69.9	100	13.2	53	6.4	2	1.6	4	15.9	4	3
DN25	26.6	33.4	49	50.8	79.9	110	14.7	56	6.4	2	1.6	4	15.9	4	3
DN32	35	42.2	59	63.5	88.9	115	16.3	58	6.4	2	1.6	4	15.9	4	3
DN40	40.9	48.3	65	73	98.4	125	17.9	62	6.4	2	1.6	4	15.9	4	3
DN50	52.5	60.3	78	92.1	120.7	150	19.5	64	6.4	2	1.6	4	19.1	4	3
DN65	62.6	73	90	104.8	139.7	180	22.7	70	6.4	2	1.6	4	19.1	4	3
DN80	77.9	88.9	108	127	152.4	190	24.3	70	6.4	2	1.6	4	19.1	4	3
DN90	90.2	101.6	122	139.7	177.8	215	24.3	72	6.4	2	1.6	8	19.1	4	3
DN100	102.3	114.3	135	157.2	190.5	230	24.3	77	6.4	2	1.6	8	19.1	6	3
DN125	128.1	141.3	164	185.7	215.9	255	24.3	89	6.4	2	1.6	8	22.2	6	3
DN150	154.1	168.3	192	215.9	241.3	280	25.9	89	6.4	2	1.6	8	22.2	6	3
DN200	202.7	219.1	246	269.9	298.5	345	29	102	6.4	2	1.6	8	22.2	6	3
DN250	254.4	273	305	323.8	362	405	30.6	102	6.4	2	1.6	12	25.4	8	3
DN300	304.8	323.8	365	381	431.8	485	32.2	115	6.4	2	1.6	12	25.4	8	3
DN350	336.6	355.6	400	412.8	476.3	535	35.4	127	6.4	2	1.6	12	28.6	8	3
DN400	387.4	406.4	457	469.9	539.8	595	37	127	6.4	2	1.6	16	28.6	8	3
DN450	438	457	505	533.4	577.9	635	40.1	140	6.4	2	1.6	16	31.8	10	3
DN500	489	508	559	584.2	635	700	43.3	145	6.4	2	1.6	20	31.8	10	3
DN600	591	610	663	692.2	749.3	815	48.1	153	6.4	2	1.6	20	34.9	10	3

unit:mm

DN	NPS	A	SCH10/SCH10S	SCH40/SCH40S
15	1/2	21.3	17	15.5
20	3/4	26.9	22.5	21
25	1	33.7	27.5	27
32	11/4	42.4	36.5	35
40	11/2	48.3	42.5	41
50	2	60.3	54.5	52
65	21/2	73.1	67	63
80	3	88.9	82.5	77.5
100	4	114.3	107.5	101.5
125	5	139.7	132.5	127
150	6	168.3	161	154
200	8	219.1	211	203

* ניתן להזמין במידות שונות.

tubing

Because of the high degree of purity and low surface roughness, Cardinal tubing is widely used in semiconductor, pharmaceutical, medical, food processing, biotechnology, and telecommunication industries. We produce tubing to eight different specifications providing economic solutions for everything from mission critical applications to instrumentation and bulk gas delivery systems.

Standard sizes range from 1/8" through 6" (3mm - 150mm) single wall tubing with electropolished surface roughness as low as Ra 5µin / 0.13 µm. We produce tubing with the full range of cleanliness specifications from T/C cleaning to double bagging and capping tubing to SEMI specifications in our ISO Class 4 clean room.

Cardinal UHP is a leading supplier of electropolished, ultra-high purity orbital weld fittings and tubing in both stick and long continuous coils used for critically pure production systems in semiconductor, biotechnology, pharmaceutical, medical, food processing, and telecommunication industries.

Products and Services

- Tubing and fittings for high purity laboratories
- High purity electropolished tubing and fittings for semiconductor applications
- Long continuous electropolished coil tubing for semiconductor and analytical sample transport

CARDINAL UHP

AMETEK®
THERMAL PROCESS MANAGEMENT

butterfly valves / ball valves ברזי פרפר/ברזי כדור

- Thermally stable handle in ergonomic design with 360° actuation, 90° locking or optionally switching limitation
- Standard or short handle design, Material: plastic, optionally in colours of your choice or stainless steel

TECHNICAL DATA Butterfly Valves	
Installation sizes:	DN 15 – 200 / 1" – 4"
Materials product wetted:	1.4301 / AISI 304 1.4307 / AISI 304L 1.4404 / AISI 316L
Sealing materials:	EPDM (SIP 140° C, 30 min) HNBR (SIP 130° C, 30 min) Silicone (SIP 100° C, 30 min) FKM (SIP 90° C, 30 min)
Surfaces product wetted:	Ra ≤ 0.8 µm
Operating pressure: DN 15 – 65 / 1" – 2½" DN 80 – 100 / 3" – 4" DN 125 DN 150 DN 200*	 16 bar 10 bar 6 bar 6 bar 6 bar

*nominal width only available for between flanges butterfly valve

- Cost effective leakage protection
- Sealing materials EPDM, HNBR
- Hygienic because of cleanable leakage chamber
- Easy maintenance construction with only one sealing element

TECHNICAL DATA Leakage Butterfly Valves	
Installation sizes:	DN 50 – 150 / 2" – 4"
Materials Product wetted	1.4404 / AISI 316L
Sealing materials:	EPDM (SIP 140° C, 30 min) HNBR (SIP 110° C, 30 min)
Surfaces product wetted:	Ra ≤ 0.8 µm, electro polished
Operating pressure: DN 50 – 100 / 2" – 4" DN 125 DN 150	 10 bar 6 bar 4 bar

Constructions
T-Ball
L-Ball

- Robust and easy to assemble
- Spring preloaded shaft seal
- Gap-free housing seal based on the aseptic union principle
- Piggable

Optionally:

- Full PTFE cavity fillers with minimal clearance volume
- Cleaning connections for external flushing of the cavities
- Heating jacket

TECHNICAL DATA Ball Valves / Three-way Ball Valves	
Installation sizes **Ball Valves:** **Three-way Ball Valves:**	 DN 25 – 100 / 1" – 4" DN 25 – 80
Materials product wetted:	1.4404 / AISI 316L
Sealing materials:	EPDM (SIP 140° C, 30 min) PTFE (SIP 130° C, 30 min) NBR (SIP 100° C, 30 min) FKM (SIP 140° C, 30 min)
Surfaces product wetted:	Ra ≤ 0.8 µm, electro polished
Operating pressure:	16 bar (Straight-way ball valve) 10 bar (Three-way ball valve)

* הזמנה בכפוף לתנאי ייבוא

KI-DS SINGLE SEAT VALVES ברז בוכנה יחיד

חדש!
KIESELMANN

Compact and universal Single seat valves in modular design

The new compact valve series KI-DS stands out particularly due to their compact design. According to your specific application, you can choose the specific actuator from a modular system of four depending on what capacity is required. Retrofitting to an actuator with a higher capacity is possible without adaptation.

The actuators can be changed over either to air to open/ spring to close or to spring to open/air to close, simply by turning them upside down. All actuators have the same overall height which allows a trouble-free connection and optimizes considerably the joint connection.

Of course, this compact series meets KIESELMANN's high hygienic standards.

The valves are available as inclined seat, angle, T-, cross, loop, change-over and tank outlet valves as well as flow control valve.

- Dead space-free housing in hygienic design
- 4 actuation sizes for the most different applications
- Maintenance-free universal actuations with 5 years warranty
- Modular principle

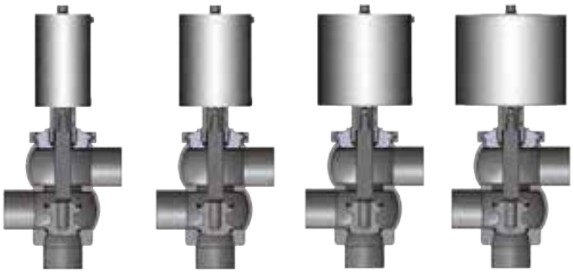

Four sizes of actuators for different applications (Operating pressure)

Universal actuator with changeable function

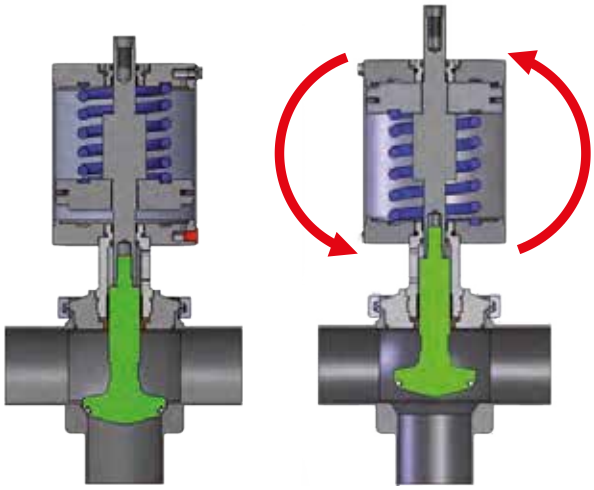

Air to open - Spring to close

Spring to open - Air to close

TECHNICAL DATA	
Installation sizes:	DN 25 – 100, 1" – 4"
Materials **Product wetted:** **not product wetted:**	 1.4404 / AISI 316L 1.4301 / AISI 304 1.4307 / AISI 304L
Seal materials:	EPDM (SIP 140 °C, 30 min) FDA compliant HNBR (SIP 130 °C, 30 min) FDA compliant
Surfaces product wetted:	Ra ≤ 0,8 µm e-polished
Operating pressure	Depending on nominal width and size of the actuator (on request)
Control air: DN 25 – 65 DN 80 – 100	 min. 5.5 bar min. 6.0 bar

ברז בוכנה כפול DOUBLE SEAT VALVES

Divided Valve Disks for Maximum Security

KIESELMANN double seat valves are leak-proof valves and serve to separate incompatible products in automatic process plants without contamination. Mixing is reliably prevented by two independent valve disks. In the case of a damaged seal, the medium will drain in a pressure-free way through the leakage gap. Lifting of the upper or lowering of the bottom valve disk enables cleaning of the leakage space.

KIESELMANN double seat valves are characterized by low operating, maintenance and repair costs.

Your Advantages:

- **The Hygienic Safety**
  Product penetration to the rear side of the gasket is absolutely impossible
- **EHEDG-certified**
  High hygienic safety due to excellent cleanability
- **Minimised product shear**
  Optimised flow path
- **Sealing material *k-flex***
  Highly chemically resistant *k-flex* valve disk sealing allows for applications with universal media with a long service life
- **Reliable leakage detection**
  Leak-free opening and closing, only a seal failure will cause leakage
- **Everything under control**
  Comprehensive possibility of automation ranging from sensor monitoring via SPS or ASI-BUS control-head, to emergency-off function and valve position display
- **Assembly handling**
  Easy and quick replacement of seals, faulty assembly is not possible
- **Optional**
  Cleaning of inspection lantern is possible

Ausführungen:
Double Seat Valve, Double Seat Change-over Valve, Double Seat Valve piggable, Double SeatTank Outlet Valve

TECHNICAL DATA	
Installation sizes:	DN 25 – 150, 1" – 4"
Materials **Product contact:** **Non-product contact:**	 1.4404 / AISI 316L 1.4301 / AISI 304 1.4307 / AISI 304L
Sealings:	EPDM (SIP 140° C, 30 min) FDA compliant HNBR (SIP 110° C, 30 min) FDA compliant *k-flex* (SIP 150° C) FDA conform
Surfaces **Product wetted:**	 Ra ≤ 0.8 µm electro polished
Operating pressure: DN 25 – DN 100 DN 125 / 150 DN 1" – 4"	 max. 10 bar max. 6 bar max. 10 bar
Pressure shock resistance:	up to 40 bar (closed valve position)
Control air:	5.5 – 8 bar (lower control air pressures on request)
Operating temperature:	95° C

DOUBLE SEAT VALVES ברז בוכנה כפול

All Advantages at a Glance

חדש!
KIESELMANN

Modular control head
Depending on the version, including:
- Position indicator and display
- Valve control
- Diagnostic system

Actuator
(with 5 year operation warranty)
- Maintenance-free
- Removable

Simple assembly
Clamp lock for complete removal of valve insert and actuator

Uniform valve disk sealing principle
results in continuous locking function and protection from pressure shocks. Leakage free opening and closing of the valve avoids product losses and hygienic problems in the leakage chamber

Spherical shaped housing
Housing design eliminates cleaning shadows to ensure safe cleaning and gentle product handling

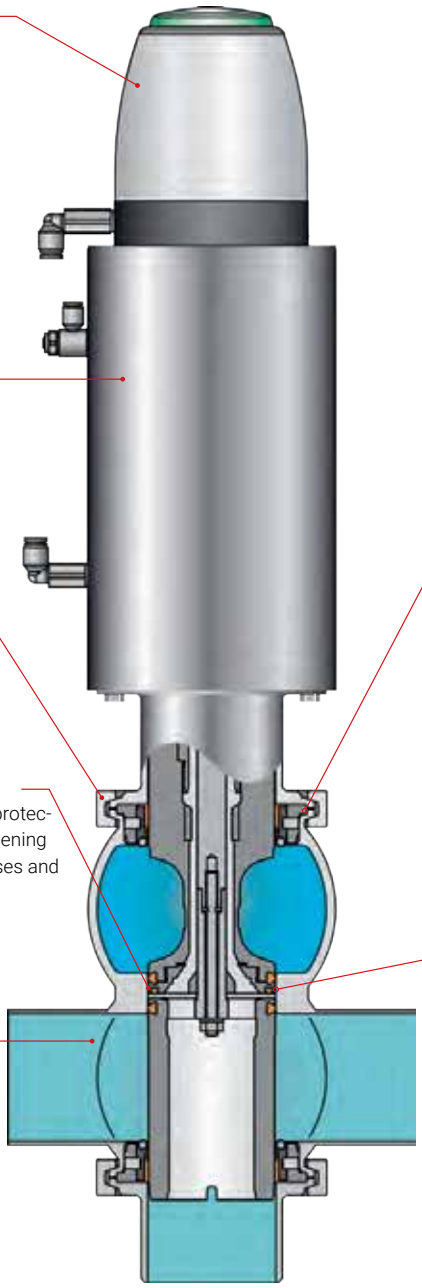

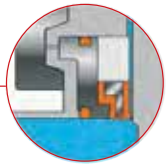

Shaft sealings with metal core
for highest dynamic and static sealing results in defined pre-compression

Positioning of all sealing elements with metallic limit stop - no clearance

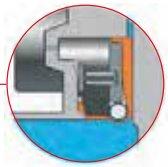

***k-flex* shaft sealings with metallic support**
for universal applications

Divided valve disks for hygienic fixation of the disk sealing. Penetration to the rear side of the valve disk sealing is thus absolutely avoided

Valve disk sealing with FEM optimised sealing form provides for continuously safe and dynamic closing characteristic

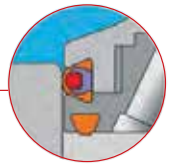

Highly chemically resistant *k-flex* valve disk sealing allows for applications with universal media with a long service life

ברז בוכנה כפול DOUBLE SEAT VALVES

Detailed functionality of Double Seat Valves

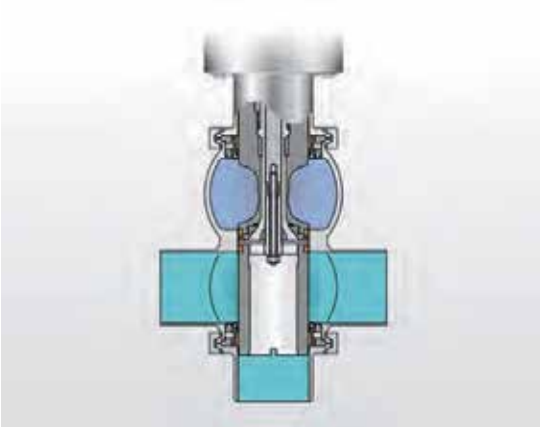

Valve closed

- Secure separation of product and cleaning media
- Possible leakages are diverted via the leakage chamber to the exterior without pressure
- Pressure shock resistant locking position

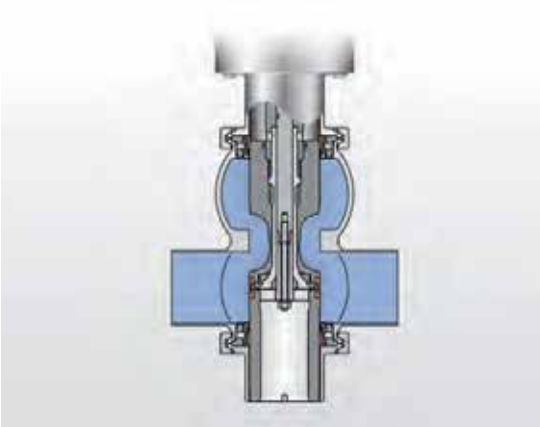

Valve open

- Loss-free switching of the valve
- Leakage chamber closed
- Valve passage designed for large capcity flow

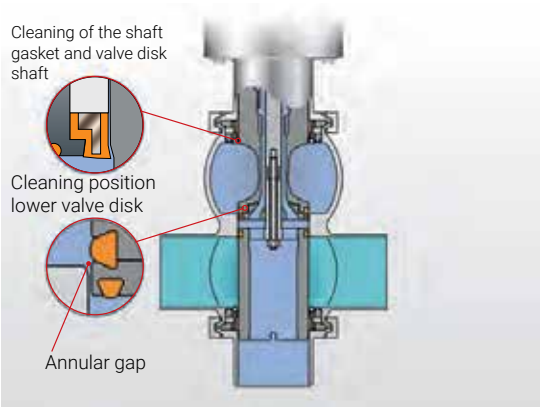

Pulsing of upper valve disk

- Lifting upper valve disk
- Cleaning and sterilization of shaft sealing, valve disk shaft, lantern, valve disk and gaskets, valve seat, leakage space with drainage and protective shell
- Cleaning fluid volume defined by metallic limited annular gap

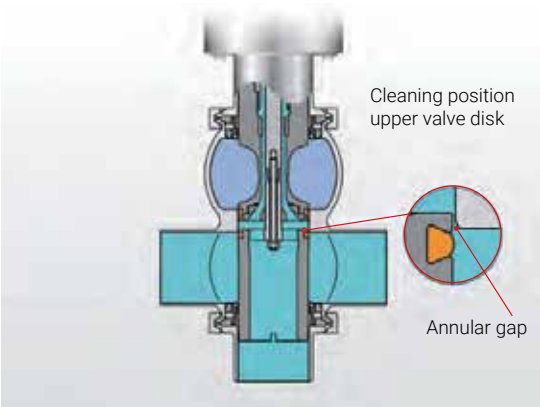

Pulsing of lower valve disk

- Lowering of lower valve disk
- Cleaning and sterilization of valve disk sealing, valve seat, leakage space with drainage and protective shell
- Cleaning fluid volume defined by metallic limited annular gap

BUNGING VALVES / PRESSURE COMPENSATION שסתומי לחץ

Constant pressure ratios

These bunging valves with spring return are continuously adjustable.

Exactly adjustable to the desired opening pressure. The valves are closed and opened very sensitively with low differential pressures.

The KIESELMANN bunging valves are available both in open design (free blowing-off of CO_2) and in closed design with pipe connection. The closed design enables to collect the excess CO_2.

Pressure compensation

A multitude of vacuum and pressure compensation valves are available for further applications.

Our application consultants will be pleased to help you to choose the appropriate valve.

In order to guarantee the vessel safety, an additional safety valve is necessary, as for this is characterized by a blow-off performance defined for critical situations and by a operating point fixly adjusted.

חדש!
KIESELMANN

Bunging valve Type 6268
(spring return)

Bunging apparatus Type 6255
including function for safety
(spring return)

Pressure compensation valve
(spring return)
Type 6131

Pressure compensation valve
(spring return)
Type 6132

Pressure compensation valve
(spring return)
Type 6133

Pressure compensation valve
(spring return)
Type 6135

TECHNICAL DATA	
Nominal widths:	G 1, DN 15*, 25* / 32, 40 and 50
Materials:	1.4301 / AISI 304 1.4404 / AISI 316L for all product wetted parts
Seal materials:	FKM, EPDM
Set pressure:	0.2 – 4 bar (Type 6268) 0.2 – 3.2 bar (Type 6255)
Standard connection variants:	Taper nut DIN 11851, G 1 other connections upon request (e. g. flanges, clamps)

*Approval for gases according to DGRL (PED)

SAFETY VALVES שסתומי ביטחון

Protection against inadmissible overpressure

KIESELMANN safety valves operate automatically, without any auxiliary energy, as soon as system pressure exceeds the adjusted set point. They are characterized by very precise response performance along with excellent flow capacity.

The safety valves are designed with a compact and closed housing. All moving parts are kept inside. On the one side it allows a proper cleaning of the outer surfaces, on the other it avoids the risk of an external blocking. The spherical shaped cavity with the hygienic designed clamp connection ensures excellent CIP / SIP performance at any time.

Basic configurations

- Spring return
- Weight loaded

Optional features

- Position sensor
- Manual easing gear
- Pneumatic easing gear

Safety valves for liquids
(spring return and weight-loaded)

Safety valves for gases (spring return)

TECHNICAL DATA	
Nominal widths:	DN 25 – 100 (liquids/gases) DN 20 (gases)
Materials:	1.4301 / AISI 304 1.4404 / AISI 316L for all product wetted parts
Seal materials:	EPDM (liquids/gases) FKM, EPDM (gases)
Set pressure:	0.2 – 12 bar depends on nominal width (liquids/gases) 0.1 – 10 bar (gases)
Operating temperature:	max. 90° C (liquids) CIP / SIP capable up to 140° C max. 130° C (gases)
Standard connection variants:	Taper nut DIN 11851 (liquids) G 1 taper nut DIN 11851 (gases) other connections upon request (e. g. flanges, clamps)
Options:	manually or pneumatically liftable heatable (liquids) Sensor inductive (liquids) cleaning hood (gases)

CLEANING TECHNOLOGY מערכות ניקוי/ממטרות

חדש!
KIESELMANN

Three-dimensional cleaning DUNOS$_O$

The DUNOS$_O$ series helps to remove incrustinations and critical deposits in a strong, quick and reliable way. Tailored to your requirements, you will achieve both an effective and efficient removal of all residues. This is rendered possible by the selection of the nozzle fitting as well as by the range of the operating pressures. The cleaner even reaches angled geometries and apparatus areas, which a conventional rotational cleaner must give in.

The DUNOS$_O$ series provides at any time for brilliant results regarding quality and economy.

Small but strong

Light and strong

- Economical and environmentally friendly at the same time, due to minimization of the used quantities, logistic, waste and disposal costs
- Integrated self-cleaning during operation
- Driven by the medium, with extremely low pressure losses
- Position of the drive of the medium possible at the head as well as alternative drives outside the vessel
- Any fitting position, fix mounting or mobile application possible optionally
- Long-life, low-maintenance design
- Easy maintenance
- Use of high-quality materials
- Optimized flow of all inner parts

Jet pattern examples of DUNOS$_O$

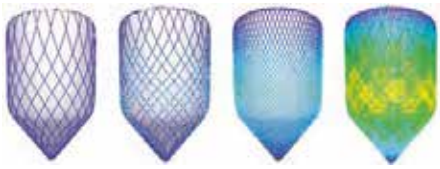

Cycle 1 Cycle 2 Cycle 3 Cycle 4

The complete inner surface is cleaned already after the first cycle. Any further cycle produces a closer meshed cleaning pattern and thus a more intensive cleaning.

TECHNICAL DATA	DUNOS$_O$ 50	DUNOS$_O$ 90
Spraying diameter:	at 2 bar up to 5000 mm	at 2 bar up to 8000 mm
Pressure range:	1 – 15 bar	
Installation opening:	min. 70 mm	min. 130 mm
Connections:	G ¾ inner thread	G 1 ½ inner thread
Operating temperature:	5 – 95° C	
Materials:	1.4404 Special materials (optional): 1.4435, 1.4571, Hastelloy	
Surfaces:	Ra ≤ 0,8 µm	
Certificates:	ATEX, material certificate, further certificates upon request	

צנרת מזון 304/316

תקן ASTM A 270

משקל תאורטי קילו/מטר	טיב פני השטח	עובי דופן	קוטר חיצוני באינצ' (OD)	קוטר חיצוני במ"מ (OD)
0,981	Ra<0.7	1.6mm	1"	25.4
1,506	Ra<0.7	1.6mm	1.5"	38.1
2,031	Ra<0.7	1.6mm	2"	50.8
2,555	Ra<0.7	1.6mm	2.5"	63.5
3,080	Ra<0.7	1.6mm	3"	76.2
5,256	Ra<0.7	2mm	4"	101.6

תקן DIN 11850

משקל תאורטי קילו/מטר	טיב פני השטח	עובי דופן	קוטר חיצוני (OD)	מידה
0,995	Ra<0.7	1.5mm	28mm	NW25
1,221	Ra<0.7	1.5mm	34mm	NW32
1,446	Ra<0.7	1.5mm	40mm	NW40
1,897	Ra<0.7	1.5mm	52mm	NW50
3,405	Ra<0.7	2 mm	70mm	NW65
4,157	Ra<0.7	2 mm	85mm	NW80
5,108	Ra<0.7	2 mm	104mm	NW100

Type A

סט שלה לצינור (ללא מוט) Tubing Hanger

לצנרת מזון ודקורטיבית

304 L

3A	ØA	DIN	ØA	ØC	L
1/2"	12.7	DN10	12/13	6	58
3/4"	19.05	DN15	18/19	8	65
—	—	DN20	22/23	8	68
1"	25.4	DN25	28/29	8	73
1.25"	31.75	DN32	34/35	10	79
1.5"	38.1	DN40	40/41	10	85
2"	50.5	DN50	52/53	12	97
2.5"	63.5	DN65	70	12	125
3"	76.2	DN80	85	15	144
4"	101.6	DN100	104	15	158
5"	127	DN125	129	18	207
6"	152.4	DN150	154	18	232

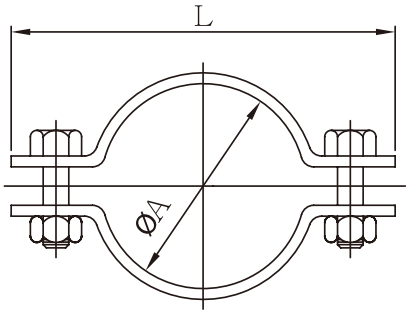

לצנרת סקדיואל 10/40, 304L

Size	A	B	D	E	G	F	I	R
0.5"	21.3	27.3	50	70	3	30	M8*25	1.5
0.75"	26.9	32.9	55	75	3	30	M8*25	1.5
1.0"	33.7	39.7	60	80	3	30	M8*25	1.5
1.25"	42.4	48.4	70	90	3	30	M8*25	1.5
1.5"	48.3	54.3	80	100	3	30	M8*25	1.5
2.0"	60.3	66.3	100	120	3	30	M8*25	1.5
2.5"	76.1	82.1	105	125	3	30	M8*25	1.5
3.0"	88.9	94.9	117.5	137	3	30	M8*25	1.5
4.0"	114.3	120.3	142.5	162	3	30	M8*25	1.5
5.0"	139.7	147.7	206	180	4	30	M8*30	2.0
6.0"	168.3	178.3	217	245	5	40	M8*35	2.5
8.0"	219.1	229.1	270	300	5	40	M8*40	2.5

צנרת סקדיוול עם ובלי תפר 304/316
SCH10, SCH10S, SCH40, SCH40S

SCH 10

מידה	קוטר חיצוני (באינצ')	קוטר חיצוני (במ"מ)	עובי באינץ	עובי במ"מ
1/8	0.41	10.3	0.049	1.24
1/4	0.54	13.7	0.065	1.65
3/8	0.68	17.1	0.065	1.65
1/2	0.84	21.3	0.083	2.11
3/4	1.05	26.7	0.083	2.11
1	1.32	33.4	0.109	2.77
1 1/4	1.66	42.2	0.109	2.77
1 1/2	1.9	48.3	0.109	2.77
2	2.375	60.3	0.109	2.77
2 1/2	2.875	73	0.12	3.05
3	3.5	88.9	0.12	3.05
3 1/2	4	101.6	0.12	3.05
4	4.5	114.3	0.12	3.05
5	5.563	141.3	0.134	3.4
6	6.625	168.3	0.134	3.4
8	8.625	219.1	0.148	3.76
10	10.75	273	0.165	4.19
12	12.75	323.8	0.18	4.57
14	14	355.6	0.25	6.35
16	16	406.4	0.25	6.35
18	18	457	0.25	6.35
20	20	508	0.25	6.35

SCH 40

מידה	קוטר חיצוני (באינצ')	קוטר חיצוני (במ"מ)	עובי באינץ	עובי במ"מ
1/8	0.405	10.3	0.068	1.73
1/4	0.54	13.7	0.088	2.24
1/2	0.84	21.3	0.109	2.77
3/4	1.05	26.7	0.113	2.87
1	1.315	33.4	0.133	3.38
1 1/4	1.66	42.2	0.14	3.56
1 1/2	1.9	48.3	0.145	3.68
2	2.375	60.3	0.154	3.91
2 1/2	2.875	73	0.203	5.16
3	3.5	88.9	0.216	5.49
3 1/2	4	101.6	0.226	5.74
4	4.5	114.3	0.237	6.02
5	5.563	141.3	0.258	6.55
6	6.625	168.3	0.28	7.11
8	8.625	219.1	0.322	8.18
10	10.75	273	0.365	9.27
12	12.75	323.8	0.406	10.31
14	14	355.6	0.375	11.13
16	16	406.4	0.5	12.7
18	18	457	0.562	14.27
20	20	508	0.594	15.09

פרופילים מרובעים 304

פרופילים דקורטיבים מנירוסטה לשימוש קונסטרקטיבי במטבחים,
בנית עגלות, מתקנים ומכונות ייצור, סקידים ועוד.
מגוון הפרופילים שלנו זמינים במלאי במגוון מידות ועובי ברמת
גימור מוברשת ו/או מלוטשת.
כל פרופיל (מרובע או מלבני) מלווה בתעודת איכות מאושרת.

עובי דופן/מידה	1	1.2	1.5	2.0	2.5	3.0
10x10	✓					
12x12	✓	✓				
15x15	✓	✓	✓			
16x16	✓	✓	✓	✓		
20x10	✓	✓	✓			
20x20	✓	✓	✓	✓		
22x22	✓	✓	✓			
25x25	✓	✓	✓	✓	✓	✓
30x30	✓	✓	✓	✓	✓	✓
35x35	✓	✓	✓	✓	✓	✓
40x40	✓	✓	✓	✓	✓	✓
45x45	✓	✓	✓	✓	✓	✓
50x50		✓	✓	✓	✓	✓
60x60			✓	✓	✓	✓
70x70			✓	✓	✓	✓
80x80			✓	✓	✓	✓
100x100			✓	✓	✓	✓
120x120				✓		✓

צנרת דקורטיבית - צנרת 304 מלוטש G400/G180

צנרת מנירוסטה לבניית מעקות, מטבחים, עגלות ועוד.
זמינה במלאי בקטרים ובעובי שונה ומגוון. כל צינור מלווה
בתעודות איכות מאושרות לפי הסטנדרט.

עובי דופן/מידה	1	1.2	1.5	2.0	2.5	3.0	4.0
1/2"	✓	✓	✓				
3/4"	✓	✓	✓	✓			
1"	✓	✓	✓	✓			
1.25"	✓	✓	✓	✓			
1.5"	✓	✓	✓	✓			
2"	✓	✓	✓	✓	✓	✓	✓
2"	✓	✓	✓	✓	✓	✓	✓
2.5"	✓	✓	✓	✓	✓	✓	✓
3"		✓	✓	✓	✓	✓	✓
4"		✓	✓	✓	✓	✓	✓

פרופילים מלבניים 304

עובי דופן/מידה	1	1.2	1.5	2.0	2.5	3.0	4.0	5.0	6.0
15X10	✓	✓							
20X10	✓	✓	✓						
20X15	✓	✓	✓	✓					
20X25	✓	✓	✓	✓					
25X10	✓	✓	✓	✓					
25X15	✓	✓	✓	✓					
30X10	✓	✓	✓						
30X15	✓	✓	✓	✓					
30X20	✓	✓	✓	✓					
30X25	✓	✓	✓	✓					
35X20	✓	✓	✓	✓					
35X25	✓	✓	✓	✓					
35X30	✓	✓	✓	✓					
35X40	✓	✓	✓	✓					
40X10			✓	✓					
40X15	✓	✓	✓	✓					
40X20	✓	✓	✓	✓		✓			
40X25	✓	✓	✓	✓					
40X27			✓						
40X30	✓	✓	✓	✓	✓				
50X10			✓						
50X20	✓	✓	✓	✓					
50X25		✓	✓	✓					
50X30	✓	✓	✓	✓		✓			
50X40		✓	✓	✓	✓	✓			
60X20		✓	✓	✓					
60X30		✓	✓	✓	✓	✓			
60X40		✓	✓	✓	✓	✓	✓		
70X20				✓		✓			
70X30				✓		✓	✓		
70X40				✓		✓			
80X20			✓	✓					
80X40		✓	✓	✓	✓	✓	✓	✓	
80X60			✓	✓	✓	✓	✓		
100X40			✓	✓	✓	✓	✓	✓	
100X50			✓	✓	✓	✓	✓	✓	
100X60			✓	✓		✓	✓	✓	
100X80				✓		✓	✓		
120X40				✓		✓	✓		
120X60				✓		✓	✓	✓	✓
120X80				✓		✓	✓	✓	✓
140X60				✓		✓	✓		
150X50				✓		✓	✓	✓	✓
150X100				✓		✓	✓	✓	
160X80				✓		✓	✓		
180X60				✓		✓	✓		

Flat Bar, Angle & Round Bar זוויות ושטוחים מנירוסטה

Flat Bar	
GRAGE: 304, 304L, 316 & 316L	
Dimension mm	kg/m
20x3	0.48
25x3	0.603
25x5	1.005
25x10	2.01
30x3	0.72
30x5	1.21
40x3	0.96
40x5	1.61
40x6	1.93
40x10	3.2
50x3	1.21
50x5	2.01
50x6	2.41
50x8	3.22
50x10	4.02
65x6	3.135
60x10	5.226
75x6	3.62
75x10	6.03
100x6	4.82
100x10	8.04

Square Bar	
GRAGE: 316	
mm across the flat	kg/m
6	0.29
8	0.515
10	0.804
12	1.16
16	2.06
20	3.22
22	3.89
25	5.03
30	7.24
35	9.85
40	12.86
50	20.1
60	28.94
80	51.46
90	65.12
100	82.14

Angle	
GRAGE: 304, 304L, 316 & 316L	
Dimension mm	kg/m
25x25x3	1.20
25x25x4	1.6
30x30x3	1.45
30x30x4	1.92
40x40x3	1.9
50x50x3	2.41
40x40x4	2.57
50x50x4	3.22
25x25x5	2
30x30x5	2.4
40x40x5	3.2
40x40x6	3.86
50x50x6	4.85
65x65x6	6.27
75x75x6	7.3

Square	
GRAGE: 316	
mm across the flat	kg/m
6	0.29
8	0.515
10	0.804
12	1.16
16	2.06
20	3.22
22	3.89
25	5.03
30	7.24
35	9.85
40	12.86
50	20.1
60	28.94
80	51.46
90	65.12
100	82.4

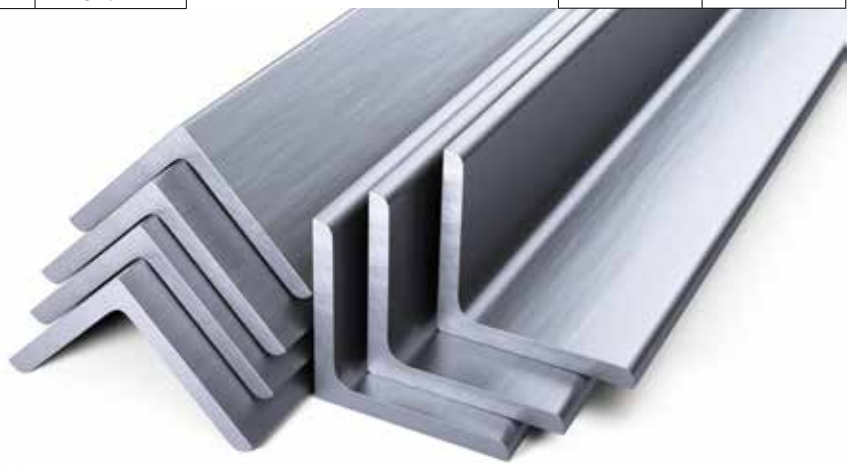

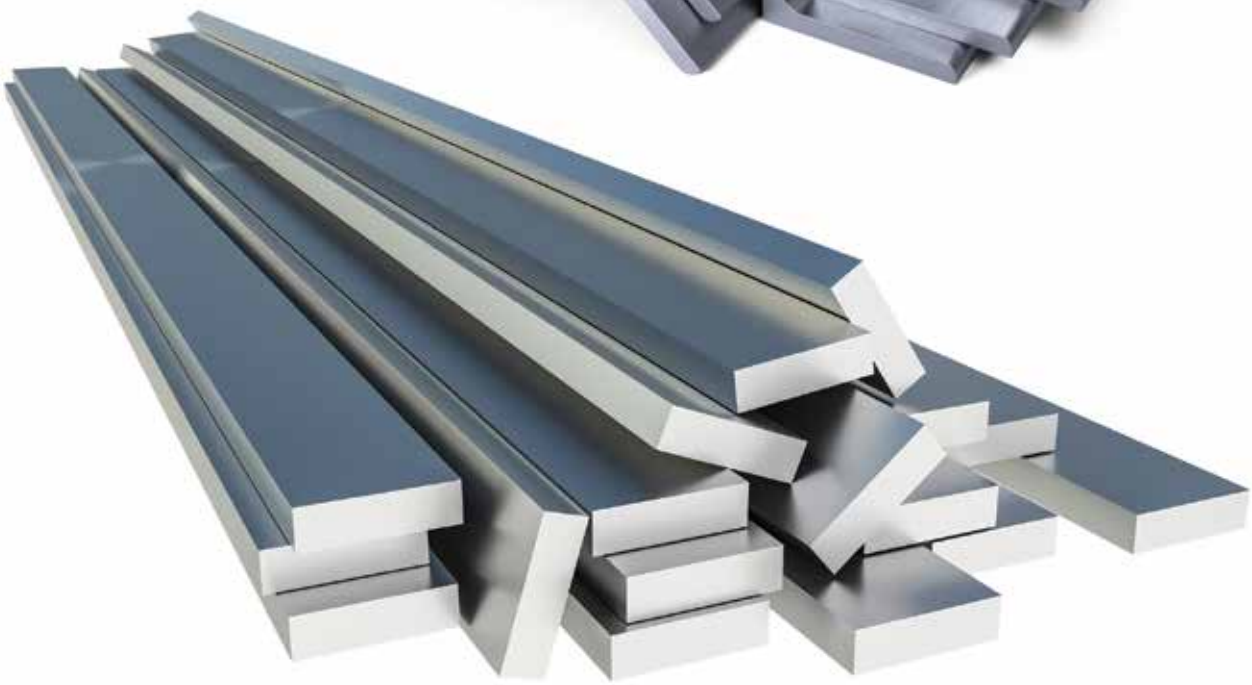

מוטות עגולים מנירוסטה

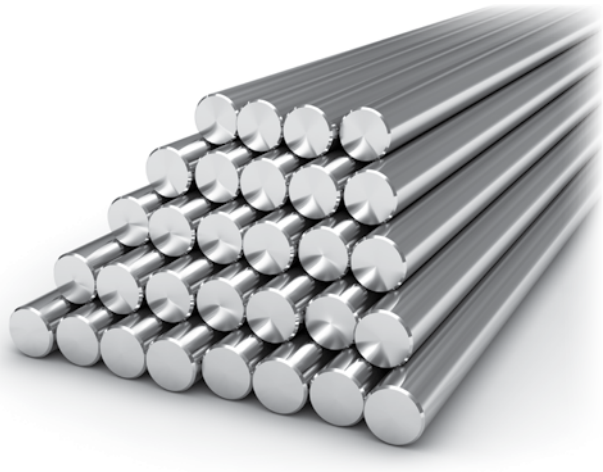

Round Bar	
GRAGE: 316, 304, 303, 431EN57	
mm	kg/m
3	0.057
4	0.101
5	0.158
5.2	0.172
6	0.227
6.1	0.235
6.35	0.254
6.5	0.267
8	0.404
8.9	0.500
10	0.631
12	0.909
12.7	1.018
13	1.066
14	1.237
15.88	1.591
16	1.615
20	2.524
25	3.944
26	4.266
28	4.95
30	5.679
32	6.461
35	7.730
36	8.178
38	9.112
40	10.096
45	12.78
48	14.54
50	15.78
50.8	16.28
55	19.09
60	22.72
65	26.66
70	30.92
75	35.49
76.2	36.64
80	40.38
85	45.59
90	51.11
95	56.95
100	63.1
101.6	65.14
105	69.57
110	76.35
115	83.45
120	90.86
125	98.59
130	106.64
135	114.99
140	123.68
145	132.67
155	151.597
160	161.54
165	171.789
180	204.4
185	215.96
195	239.93
200	252.4
220	305.40
230	333.799
250	394.38
290	530.68
300	567.9

Hexagonal Bar	
GRAGE: 316	
mm across the flat	kg/m
6	0.251
8	0.44
10	0.70
11	0.84
12	1.00
13	1.18
14	1.36
17	2.01
19	2.51
22	3.37
24	4.01
27	5.08
30	6.27
32	7.13
36	9.02
38	10.05
41	11.70
45	14.10
50	17.41
55	21.06
60	25.07
65	29.42

ברזי BETTS למכליות

Prelim. Parts List for EV46110SSTS056 and EV46227SSTS056 3” and 4” Stainless Steel Emergency Valves, ‘056’ Suffix

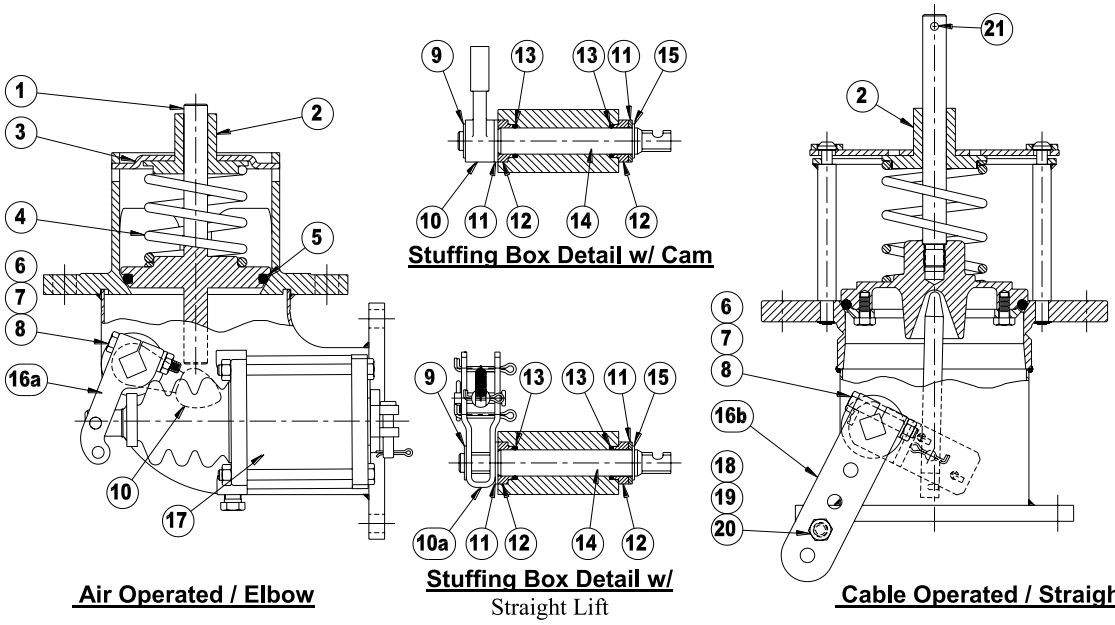

NO.	REQ.	DESCRIPTION	MATERIAL	PART NO.	
				3” VALVE	4” VALVE
1	1	Stem & O-Ring Holder	Stnls 316	18119SS	27986SS001
1a	1	O-Ring Retainer	Stnls 316	N.A.	27443SS
1b	4	Cap Screw ¼ -28 x ½	Stnls 316	N.A.	9Q4174
2	1	Shaft guide	Glass-filled PTFE	19180TR	19180TR
3	1	Bonnet	Stnls 316	17888SS	27017SS
4	1	Spring	Stnls 316	17884SS	18222SS
5	1	Seat O-Ring	Tef-Sil	17890TS	19033TS
6	1	Cap Screw ¼-20UNC x 1-½”	Steel – Zinc Plt.	9Q5947	9Q5947
7	1	Lockwasher ¼”	Steel – Zinc Plt.	9Q5845	9Q5844
8	1	Hex Nut ¼-20UNC	Steel – Zinc Plt.	9Q5806	9Q5806
9	1	Cam Retaining Ring	Stnls 15-7 Ph	9Q4933	9Q4933
10	1	Cam	Stnls 316	15086SS056 W/ 9Q5979	15086SS056 W/ 9Q5979
10a	1	Straight Lift Assembly	Stnls 316	N.A.	N.A.
11	2	Washer	PTFE	15432TF	15432TF
12	2	Retaining Sleeve	Stnls 316	18467SS	18467SS
13	2	Cam Shaft O-Ring	Tef-Sil	17946TS	17946TS
14	1	Cam Shaft	Stnls 316	18469SS	18469SS
15	1	Spacer Sleeve Retaining Ring	Stnls 15-7 Ph	9Q4970	9Q4970
16a	1	Lever Arm – Air Cylinder	Steel – “E” Coated	18366EY	18366EY
16b	1	Lever Arm – Cable	Steel – “E” Coated	10587EY	10587EY
17	1	Air Cylinder	Aluminum / Nitrile	AC35005ALB	AC35005ALB
18	1	Bolt 5/16-18UNC x 1” lg.	Steel – Zinc Plt.	9Q5829	9Q5829
19	1	Lockwasher 5/16”	Steel – Zinc Plt.	9Q5847	9Q5847
20	1	Hex Nut 5/16-18UNC Thd.	Steel – Zinc Plt.	9Q5808	9Q5808
21*	1	Bail Pin 3/16 x 1” lg.	Stnls 420	9Q5901	9Q5901
22	1	Stuffing Box Boot	Neoprene	19937NE	19937NE
23	1	Cable Tie	Nylon	9W3384	9W3384

ניתוטל
2R
1824
מהיר ת רכב אדור

20100 L
7000 L
מגט

שסתומים FORT VALE עבור מכליות

FORT VALE®

2½" BSP Pressure Only Super Maxi Relief Valve

2½" BSP Super Maxi Emergency Relief Valve - 2½" BSP male connection with 65mm nominal bore. Suitable for a pressure range of between 2 - 75 PSI (0.14 - 5.17 Bar). Contact parts manufactured in 316 stainless steel fitted with Fortyt seals as standard. Complete with rubber/PTFE tank seal.

Options - combined pressure/vacuum version. Flanged connections available. High pressure range of extended body valves. A range of alternative seal materials is available.

Range

Part No.	Common Valve Configurations
010/13200	31.8 PSI (2.19 Bar)
010/14800	48.0 PSI (3.31 Bar)
010/15400	53.8 PSI (3.71 Bar)
010/16300	63.8 PSI (4.40 Bar)

NB Above part number varies according to valve pressure and vacuum settings. These are standard settings.

Associated Parts

Part No.	Associated Parts
600/1000	2½" BSP weld-in socket
176/7020	Adaptor assembly for bursting disc
176/3150	Tank weld-in pad
176/7001	Adaptor flange for bursting disc
862/XXXX *	65mm bursting disc – full range available
5005-398	CNAF/PTFE gasket to suit weld-in pad /adaptor flange
921/07BBSP	0-100 PSI pressure gauge, bottom entry, brass internal parts
921/07RBSP	0-100 PSI pressure gauge, rear entry, brass internal parts
920/07BBSP	0-100 PSI pressure gauge, bottom entry, stainless steel internal parts
176/2900 *	Removable flameproof gauze
176/6000 *	Gauzed cowl

שסתומים FORT VALE עבור מכליות

Specification

Weight	4.12 Kg *Varies
Temperature Range	Dependant upon seal material

Design Approval by Lloyds Register of Shipping.

Tests may be witnessed and valves individually stamped by an independent inspectorate by arrangement.

Test certificates are supplied as standard.

Valve flow rates are available by request.

*** Fitting ancillary items in the flow stream will alter the valve flow rate.**

Fitting Details

Example shown : 010/1XX00

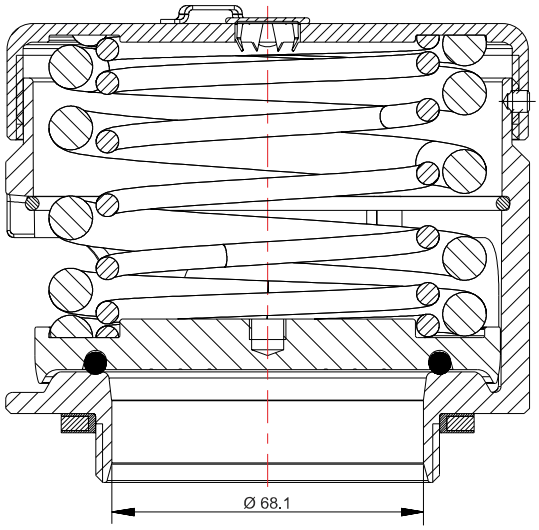

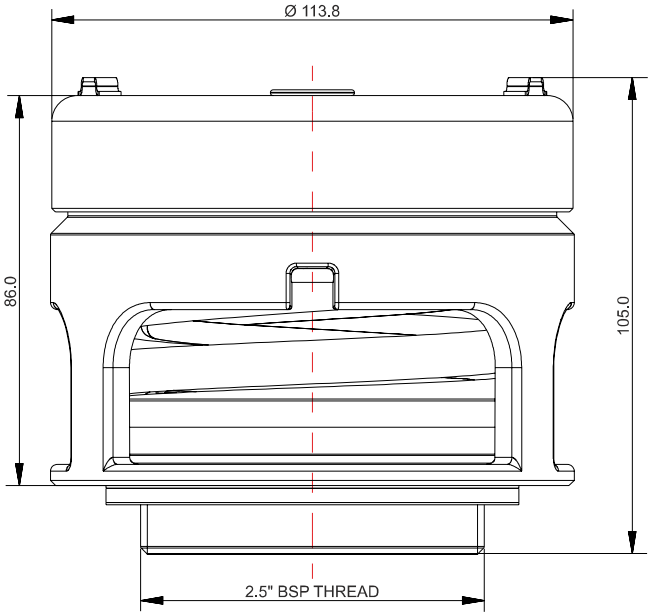

לקונקט מבחר מגוון של פתחי אדם מנירוסטה ואטמים בגדלים ובתצורות שונות עבור כל סוגי המיכלים מנירוסטה.
פתחי האדם מיובאים מחברות מהשורה הראשונה בתחום.
*** במלאי סוגים נוספים**

פתח אדם אובלי קטן - דגם A7

סוג פתיחה	פנימית
מידות	440X310mm
לחץ עבודה	3 bar
צווארון	60X8mm
סוג אטם	EPDM
מק"ט	A714 - 440310LAV
מק"ט	A716 - 440310LAV

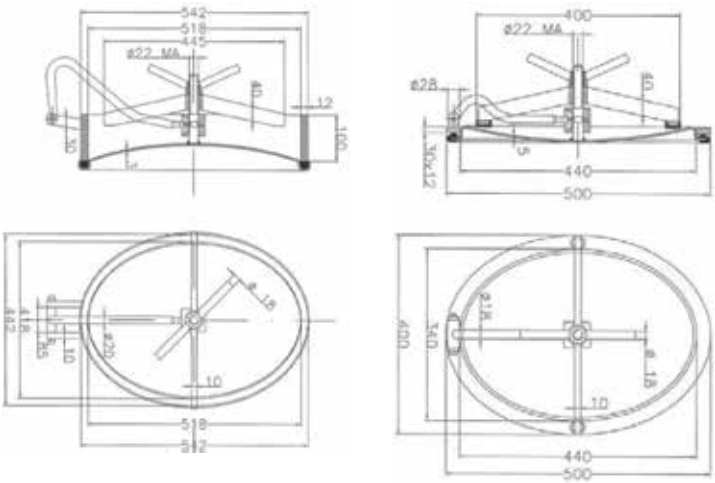

פתח אדם עגול קטן

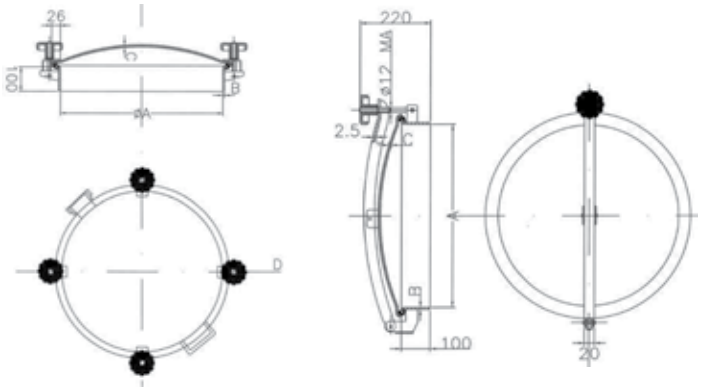

D22 D20

פתח אדם מלבני

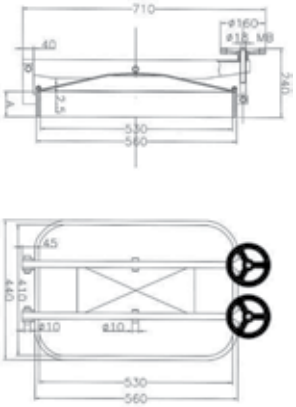

B6

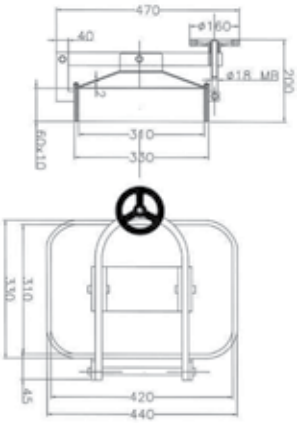

B5

אטמים לפתחי אדם (EPDM, NBR, SILICON)

לקונקט מבחר של אטמים
לפתחי אדם בגדלים
ובתצורות שונות

למגט קונקט התמחות בתחום מערכות ניקוז מנירוסטה לתעשיה, ויתרונה הוא במתן פתרונות מתקדמים, המותאמים על פי דרישת הלקוח. מערכות מסוג זה הותקנו במפעלי תרופות, מזון וכימיה מובילים בארץ.

P.005

GULLY 300X300
OUTLET ∅ 101,6/110 mm

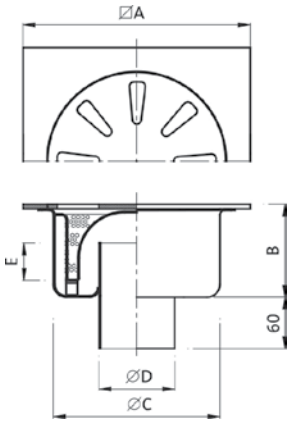

Features

Finish: **Sand-blast**

Also available: with or without basket, with cover fastened with a screw, and also with top plate of different thickness.
On request round model.

Item.	Main Measurements (mm)					Capacity (Kg)		Outlet capacity
	⧄A	B	∅C	∅D	E	Concentrated load	Distributed load	Lt/min.
P 005	300	126	220	101,6 110	60	850	6500	140

P.007

REINFORCED GULLY 300X300
OUTLET ∅ 101,6/110 mm

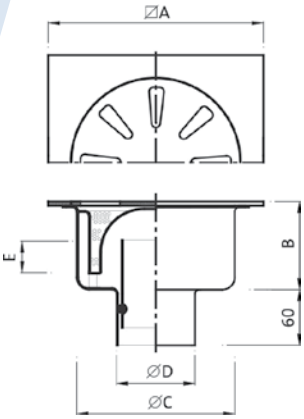

Features

Finish: **Sand-blast**

Also available: with or without basket, with cover fastened with a screw, and also with top plate of different thickness.
On request round model.

Item.	Main Measurements (mm)					Capacity (Kg)		Outlet capacity
	⧄A	B	∅C	∅D	E	Concentrated load	Distributed load	Lt/min.
P007	300	145	220	101,6 110	60	1600	16400	130

P.024

GULLY 150X150
OUTLET ∅ 50 mm

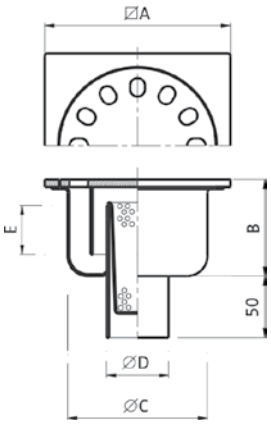

Features

Finish: **Sand-blast**
Also available with or without basket and with cover fastened with a screw.
On request round model.

Item.	Main Measurements (mm)					Capacity (Kg)		Outlet capacity
	∅A	B	∅C	∅D	E	Concentrated load	Distributed load	Lt/min.
P 024	150	80	110	50	35	1000	5000	38

P.025

GULLY 250x250
OUTLET ∅ 76 mm
WITH REMOVABLE SIPHON

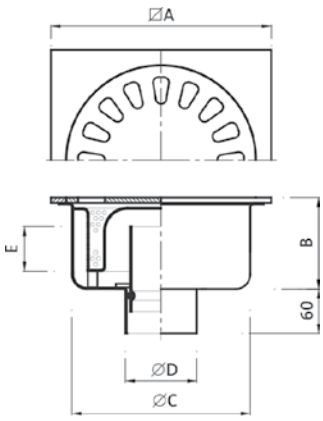

Features

Finish: **Sand-blast**
Also available: with or without basket, with cover fastened with a screw, and also with top plate of different thickness.
On request round model.

Item.	Main Measurements (mm)					Capacity (Kg)		Outlet capacity
	∅A	B	∅C	∅D	E	Concentrated load	Distributed load	Lt/min.
P 025	250	115	195	76	50	850	6500	46

P.026

GULLY 300X300
OUTLET ∅ 110 mm
WITH REMOVABLE SIPHON

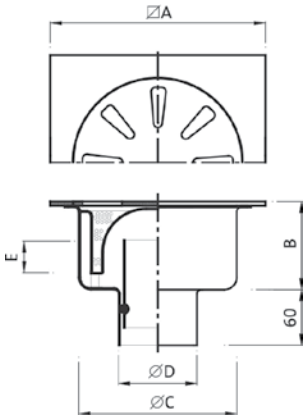

Features

Finish: **Sand-blast**
Also available: with or without basket, with cover fastened with a screw, and also with top plate of different thickness.
On request round model.

Item.	Main Measurements (mm)					Capacity (Kg)		Outlet capacity
	∅A	B	∅C	∅D	E	Concentrated load	Distributed load	Lt/min.
P.026	300	126	220	110	60	850	6500	130

P.028

GULLY 150x150
OUTLET ∅ 50 mm

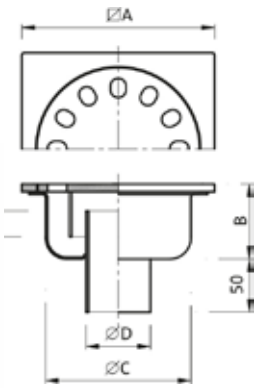

Features

Finish: **Sand-blast**

Also available with or without basket and with cover fastened with a screw.
On request round model.

Item.	Main Measurements (mm)					Capacity (Kg)		Outlet capacity
	∅A	B	∅C	∅D	E	Concentrated load	Distributed load	Lt/min.
P.028	150	55	110	50	20	1000	5000	38

P.30L/2

GULLY 250X250
OUTLET ∅ 76/80 mm

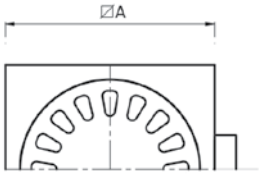

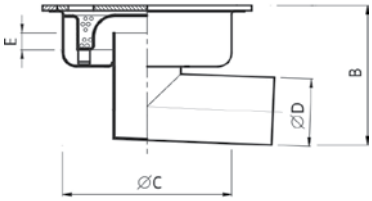

Features

Finish: **Sand-blast**

Also available with or without basket and with cover fastened with a screw.
On request round model.

Item.	Main Measurements (mm)					Capacity (Kg)		Outlet capacity
	∅A	B	∅C	∅D	E	Concentrated load	Distributed load	Lt/min.
P.030L	250	175	195	76 80	25	850	6500	80
P.016L	250	200	195		50	850	6500	80

P.064

GULLY 250x250
OUTLET ∅ 76/80 mm

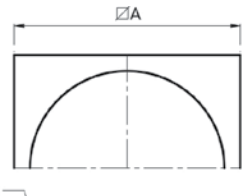

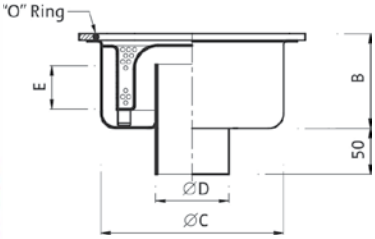

Features

Finish: **Sand-blast**

Also available: with or without basket, lower and round version, with cover fastened with a screw.
Sucker, accessory sell separately.

Item.	Main Measurements (mm)					Capacity (Kg)		Outlet capacity
	∅A	B	∅C	∅D	E	Concentrated load	Distributed load	Lt/min.
P.064	250	115	195	76 80	50	850	6500	80

P.065

GULLY 300x300
OUTLET ∅ 101,6/110 mm

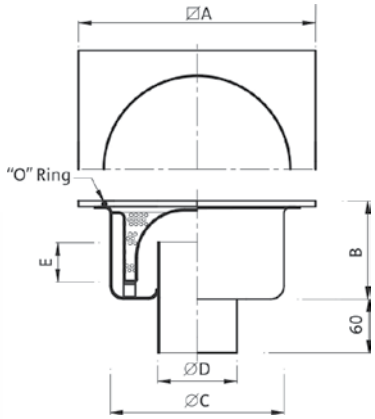

Features

Finish: **Sand-blast**

Also available: with or without basket, lower and round version, with cover fastened with a screw. Sucker, accessory sell separately.

Item.	Main Measurements (mm)					Capacity (Kg)		Outlet capacity
	∅A	B	∅C	∅D	E	Concentrated load	Distributed load	Lt/min.
P.065	300	126	220	110 101,6	60	850	6500	130

P.074

GULLY 300X300
WITH SEPARATED BASKET
OUTLET ∅ 101,6/110 mm

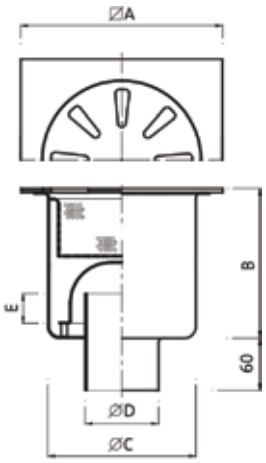

Features

Finish: **Sand-blast**

Also available with top plate of different thickness.
On request round model.

Item.	Main Measurements (mm)					Capacity (Kg)		Outlet capacity
	∅A	B	∅C	∅D	E	Concentrated load	Distributed load	Lt/min.
P.074	300	220	220	101,6 110	60	850	6500	130

P.076

GULLY 300X300
WITH SEPARATED BASKET
OUTLET ∅ 101,6/110 mm

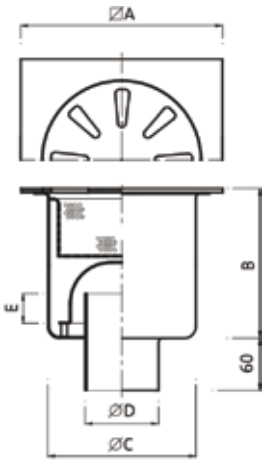

Features

Finish: **Sand-blast**

Also available with top plate of different thickness.
On request round model.

Item.	Main Measurements (mm)					Capacity (Kg)		Outlet capacity
	∅A	B	∅C	∅D	E	Concentrated load	Distributed load	Lt/min.
P.076	350	250	290	154	60	600	4000	220

P.023

They represent an exellent solution where a channel with a high drainage capacity is called for together with the functionality of a grating cover enabling them to be inspected throughout.
Combined with 300 x 300 mm collection gullies, the same as the PC.001 slot channel systems, they are easily washed and inspected and the aspects of hygiene and cleanliness are provided for in compliance with Community regulations. Protection from sewerage discharge is ensured by an anti-smell siphon and by a removable filter basket.

Main Features	
Channel width on the floor	150mm
Inside channe width	70mm
Thickness of material	2mm (3mm on request)
Drainage slope	0,4% (4mm per linear metre)
Minimum height Maximum height	70mm 95mm (30 metres)
Max. transport length	4/6 mt.
Cramps for anchoring	every 330mm
Flanges with screws	every 4/6 m.

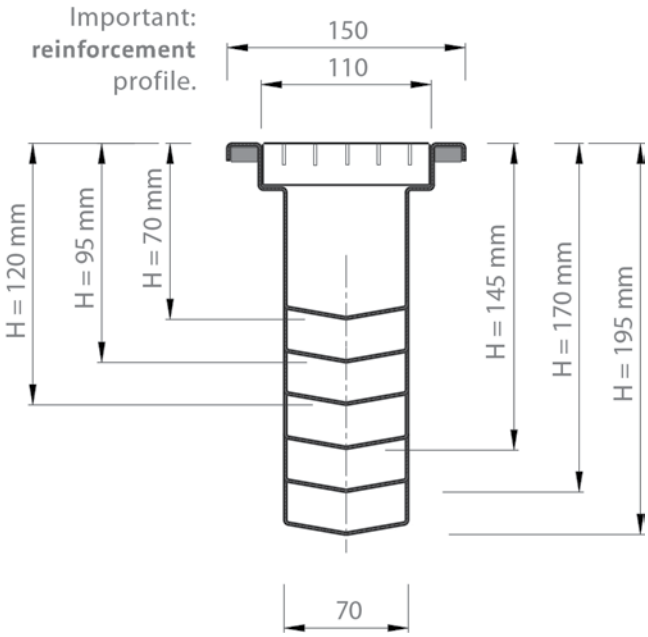

Section of the channel with a sequence of the variation of the slope up to 30.00 mt; the heights are with reference to module lengths of 6.00 mt.

NOTE: **Work is regularly carried out with totally** personalised lengths taking no account of standard modules.

PC.001

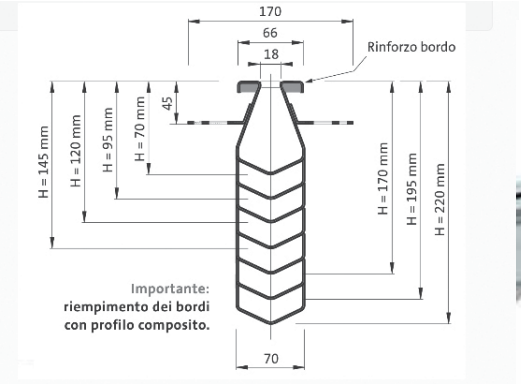

SLOT CHANNELS SYSTEMS PC.001 WITH LOWER GULLIES

Home Prodotti Channels Drainage system in stainless steel Stainless steel slot channels systems
Slot channels systems PC.001 with LOWER GULLIES

Features

The "Leoni" slot channels is the ideal solution for the drainage of industrial flooring of all types.
Manufactured entirely of AISI 304 stainless steel(or AISI 316 on request), combined with 300x300mm collection gullies they are easily washed and inspected and the aspects of hygiene and cleanliness are provided for in compliance with Community regulations.
Protection from sewerage discharge is ensured by an anti-smell siphon and by a removable filter basket.
Their structure, thanks also to the special cramps for anchoring in concrete make the channel especially tough in situations with high levels of flow-rate.
The construction of these systems is carried out completely in accordance with the requirements of the customer with one of our support technicians; in fact every quotation will be provided with its associated drawing showing the principal technical characteristics.
In the event that the supply is for large quantities the various modules can be supplied in lengths of 5,00 m.
For small supplies, to optimise the transport operations, the various pieces can be assembled into maximum lengths of 4,00 meters.
The assembly of the various gullies and the channels is provided for by means of flanges with silicon seals that are secured with bolts to ensure that they remain water-tight. Mounting kit is supplied directly from us.

NOT STANDARD GRATING COVERS FOR CHANNELS

Slotted panel in heavy duty sheet steel

Features
Slotted panel in heavy duty sheet steel, particularly used for channel PC.023 and PC.024

Grating panel with anti-slip grooves

Features
For all models.

Flat bar panel

Features
Excellent suitability for vehicles for all models

Panel in textured heavy duty sheet metal

FeaturesPanel in textured heavy duty sheet metal with slots and reinforcements in heel-proof plate.
Good suitability for vehicles for all models

Panel in perforated sheet metal

FeaturesPanel in perforated sheet metal normally used with channel PC.023
Not suitable for vehicles

Heavy duty plate panel

Features
Heavy duty plate panel with square section bar reinforcements, particularly used for channels PC.023 and PC.024.
Excellent suitability for vehicles.

סליל חוט ריתוך MIG

עובי 1.2 מ"מ
AISI 316
אריזות של 15 ק"ג

מוטות ריתוך TIG

עובי 1.2, 1.6. 2.0, 2.4 מ"מ
AISI316
אריזות של 5 ק"ג

זקוקים לאביזר מרותך לא סטנדרטי?
אנו מייצרים אביזרים על פי דרישה ספציפית.
שאל אותנו.

פלי-ג'לי לטיפול בפלב"ם אחרי ריתוך

פלי ג'ל PELI – GEL

פלי ג'ל היינו חומר המיועד לטיפול בפלב"ם לאחר ריתוך.

החומר מסיר תחמוצות שחורות, חלודה, ומסייע במניעת קורוזיה (פסיבציה).
החומר משאיר את פני השטח של המוצר בגוון מט.
מתאים לנתכים 304, 316, PH 15-5, PH 17-4, אינו מתאים לנתך 303.
מתאים לתקן אמריקאי ASTM-A380.
כהכנה לתקנים AMS-PS2700, ASTM-QQ-P-35C, ASTM-A967.

הרכב כימי

1. חומצה חנקתית.
2. מלחי חומצה פלואורית.
3. דטרגנטים נוניוניים עמידים בחומצות.
4. תוספי הסמכה.

הוראות שימוש:

1. יש לנער היטב את החומר שבאריזה לפני השימוש.
2. חשוב מאוד לנקות את החלקים המטופלים מלכלוך בעיקר משמנים וגריז (מומלץ להשתמש במוצרים כגון מסירי שומן).
3. מריחה בעזרת מכחול או מברשת שכבת פלי ג'ל על ריתוך.
4. משך שהייה 15-45 דקות על פי סוג הריתוך, חומר הגלם ומצב פני השטח, רצוי לא פחות מ-10 דקות.
5. שטיפה במים תוך כדי הברשה במברשת פלסטית.
6. במידה והתוצאה אינה משביעה רצון ניתן לחזור על התהליך.
7. ייבוש בעזרת אוויר דחוס ו/או במטלית או נייר נקיים.
8. יש לשטוף את המכחול או המברשת לאחר השימוש.

הערות שימוש חשובה :

1. אסור להוסיף לפלי ג'ל מים או כל חומר לדילול.
2. אסור למרוח פלי ג'ל על מתכת חמה מיד לאחר הריתוך.
3. רצוי לא למרוח את פלי ג'ל על שטח חשוף לקרינת שמש חזקה, מחשש לפעילות מהירה של החומר.
4. אחסון במקום קריר ומוצל. אין לחשוף את המוצר לקרני השמש.

הוראות בטיחות:

1. יש לעבוד עם כפפות פלסטיק או גומי, ביגוד מגן ומשקפי מגן.
2. יש לעבוד בסביבת עבודה מאווררת.
3. במידה והנוזל ניתז על הגוף - יש לשטוף מיד בהרבה מים זורמים ולפנות לטיפול רפואי במידת הצורך.
4. במידה ויש פגיעה בעיניים יש לשטוף מיד כ-5 דקות רצוף במי ברז ולפנות לטיפול רפואי.

זהירות חומצות חזקות

פלידול לניקוי והברקת משטחי נירוסטה

פלידול – PELIDOL

שימושים
פלידול משמש לניקוי והברקת משטחי נירוסטה מכתמי שמן, אבנית ולכלוכים שונים.

הרכב כימי

נוזל הפלידול מורכב מריכוזים מיוחדים של החומרים הבאים:
1. חומצה פוספורית ופוספטים שונים.
2. דטרגנטים אורגנים.
3. אמולגטורים אורגניים.
4. תוספות של חומרים מייצבים ואינהיביטורים.

הוראות שימוש:
להבריש, לרסס או למרוח את הנוזל על פני השטח, להשהות 30 דקות.
לשטוף בזרם מים קרים או חמים.

הוראות בטיחות:
פולידול הינו חומר מתאים לניקיון למוצרי פלב"ם לתעשיית המזון בתנאי שבוצעה שטיפה יסודית לאחר הניקיון בדרסידול.
פולידול הינו נוזל חומצי. יש לעבוד עם משקפי מגן וכפפות גומי.
במקרה של פגיעה בעיניים או בעור יש לשטוף במים זורמים למשך 10 דקות.

מספר או"מ: 1805, קוד חרום (R2) קבוצת סיכון: 8

זהירות חומצה - לא למאכל

נוזל להסרת חלודה מנירוסטה P-101

נוזל להסרת חלודה מנירוסטה ואלומיניום
P-101 הינו נוזל המיועד לניקוי והסרת כתמי חלודה, אבנית ולכלוכים ממשטחי נירוסטה ואלומיניום. מתאים לניקיון למוצרי פלב"ם ואלומיניום בתעשיית המזון.

הרכב החומר:

1. חומצה זרחתית
2. חומצה פלואורית.
3. ממיסים אורגנים.
4. דטרגנטים נוניוניים.

הוראות שימוש:

1. לנקות את החלקים המטופלים משמנים וגריז (מומלץ להשתמש במסיר שומן G-207 של פלימת)
2. הנוזל מוכן לשימוש. **אין למהול את הנוזל !!!**
3. למרוח, לטבול או לרסס על פני השטח עם P-101.
4. להשהות למשך 5-30 דקות על פי סוג המוצר ומצב פני השטח.
5. שטיפה במי רשת או במים מטופלים עד הגעה ל-PH=7 (ניטרלי).
6. ייבוש בעזרת אוויר דחוס ו/או ניגוב במטלת או נייר נקיים.

הוראות בטיחות:

1. יש לעבוד עם כפפות פלסטיק, ביגוד מגן ומשקפי מגן.
2. יש לעבוד בסביבת עבודה מאווררת.
3. במידה והנוזל ניתז על הגוף - יש לשטוף מיד בהרבה מים זורמים ולפנות לטיפול רפואי במידת הצורך.
4. במידה ויש פגיעה בעיניים, יש לשטוף מיד כ-5 דקות רצוף במי ברז זורמים ולפנות לטיפול רפואי.

זהירות, חומצות חזקות !!!

נוזל למכונת פסיבציה - P-501

שימושים
ניקוי והברקת ריתוכי נירוסטה במכשיר ניקוי

הרכב כימי

חומצה זרחתית	7664-38-2	30-50
NP-9	26027-38-3	0-3
מעכבים		0-3
אינהיביטורים		0-3
מים		השלמה ל-100

הוראות שימוש:
השתמש בציוד מגן כגון כפפות, משקפי מגן, נעלי בטיחות. ספוג בחול.
עבודה במקום מאורר היטב. במקרה של שפך יש להשתמש במיגון אישי של משקפי שמש, כפפות, בביגוד ובנעלי מגן.

הוראות בטיחות:
לא ידועות תופעות לוואי בשימוש רגיל
עלול לגרום גירוי בעור ובעיניים, ובבליעה לשלשול והקאות
החומר יציב ואינו מתפלמר. אסור במגע עם חומרים מחמצנים ועם חומצות חזקות.

זהירות חומצה - לא למאכל

לניקוי תחמוצות ושאריות ריתוך P-250

נוזל המיועד לטיפול בפלב"ם לאחר סיום עבודות שונות כגון עיבוד שבבי, טיפול תרמי, ליטוש מכני או ריתוך. החומר מסיר תחמוצות שחורות (אוקסידים), אבנית, חלודה ומסייע במניעת קורוזיה. החומר משאיר את פני השטח של המוצר בגוון מט. ניתן ליישום בטבילה או בהברשה והשהיה על המוצר.

מתאים לנתכים 304, 316, PH 15-5, PH 17-4 אינו מתאים לנתך 303.
מתאים לתקן אמריקאי ASTM-A 380
כהכנה לתקנים AMS-PS2700 , ASTM-QQ-35C, ASTM-A967.

הרכב כימי

P-250 הינו תמיסה מימית הכוללת:
1. חומצה חנקתית מהולה
2. מלחי חומצה פלואורית.
3. דטרגנטים נוניוניים עמידים בחומצות.

הוראות שימוש:
1. חשוב מאוד לנקות את החלקים המטופלים מלכלוך בעיקר משמנים וגריז.
2. הנוזל מוכן לשימוש - **אין למהול את הנוזל !!!**
3. טמפרטורת עבודה 20-35 C.
4. משך הטבילה 5-60 דקות על פי סוג המוצר ומצב פני השטח.
5. שטיפה במי רשת או במים מטופלים עד הגעה ל-PH=7 (ניטרלי).
6. ייבוש בעזרת אוויר דחוס ו/או ניגוב במטלית או נייר קיים.

הוראות לאורך זמן באמבט:
1. את נפח התמיסה באמבט שיורד בעקבות הנגר יש להשלים בתמיסה טריה.
2. כאשר הפעילות על פני שטח המוצר לא מספקת בזמני הטיפול הרגילים, יש להאריך את זמן הטיפול. בעבודה בטמפרטורה נמוכה יש להאריך את זמן הטבילה.
3. במידה ותוספת הזמן אינה מביאה לתוצאה הרצויה, יש להחליף את כל תכולת האמבט בתמיסה טריה.

הוראות בטיחות:
1. יש לעבוד עם כפפות פלסטיק, ביגוד מגן ומשקפי מגן.
2. יש לעבוד בסביבת עבודה מאווררת.
3. במידה והנוזל ניתז על הגוף - יש לשטוף מיד בהרבה מים זורמים ולפנות לטיפול רפואי במידת הצורך.
4. במידה ויש פגיעה בעיניים יש לשטוף מיד כ-5 דקות רצוף במי ברז ולפנות לטיפול רפואי.

זהירות חומצות חזקות

משאבות סניטריות מאיטליה בעלות אימפלר בורגי

משאבות צנטרפוגליות דגם TCD תוצרת Technicapompe

חשיבות סחרור היין בשלבי התסיסה הינה קריטית ביותר. השפעה שלילית של סחרור היין באמצעות משאבות צנטריפוגליות מכל סוג שהוא הנו ברור וידוע. כך המקרה גם במשאבות בעלות אימפלר גומי אשר הנן בעלות מהירות סיבוב גבוהה.

משאבות סחרור היין מחב' Tecnicapompe דגם TCD הנן היחידות בעלות אימפלר נירוסטה בורגי המבטיח סחרור היין בסל"ד נמוך ובצורה בורגית דבר המאפשר מעבר קליפות, ענבים וגרעינים מבלי לגרום ל"שבר" או "טחינה" של החומר המועבר. דגם זה משווק היום בהצלחה רבה בכל העולם וגם בישראל במספר רב של יקבים.

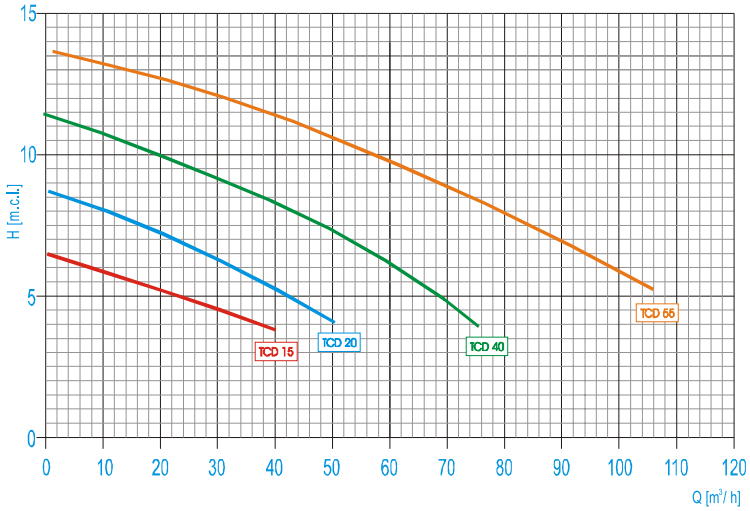

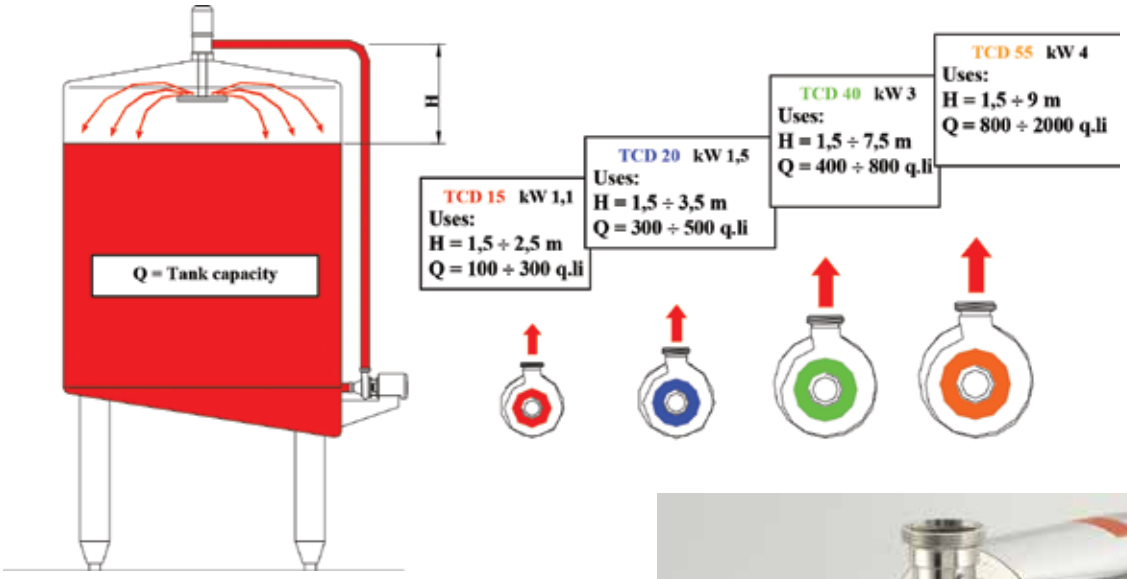

100
PRODUCT-OUT
PRODUCT-OUT
PRODUCT-IN
PRODUCT-IN

connect
צנרת ואביזרי נירוסטה

www.mgt-connect.co.il

מגט קונקט בע"מ
אזור תעשייה קורן | ת.ד. 499 מעלות | 2101401
טלפון: 04-9972227 | פקס: 04-9576085
sales@mgt-connect.co.il